CD - Cassette Car Radio 22DC982/62B

Cassette Car Radio 22DC962/62B

Service
Service
Service

For repair instructions of the CD-Player see
Service Manual CMX-200 Nr. 4822 725 24151
For repair instructions of the cassette-deck see
Service Manual of SCA 2.5 Nr. 4822 725 23505

ServiceManual

12 V

CLASS 1
LASER PRODUCT

COMPACT disc DIGITAL AUDIO

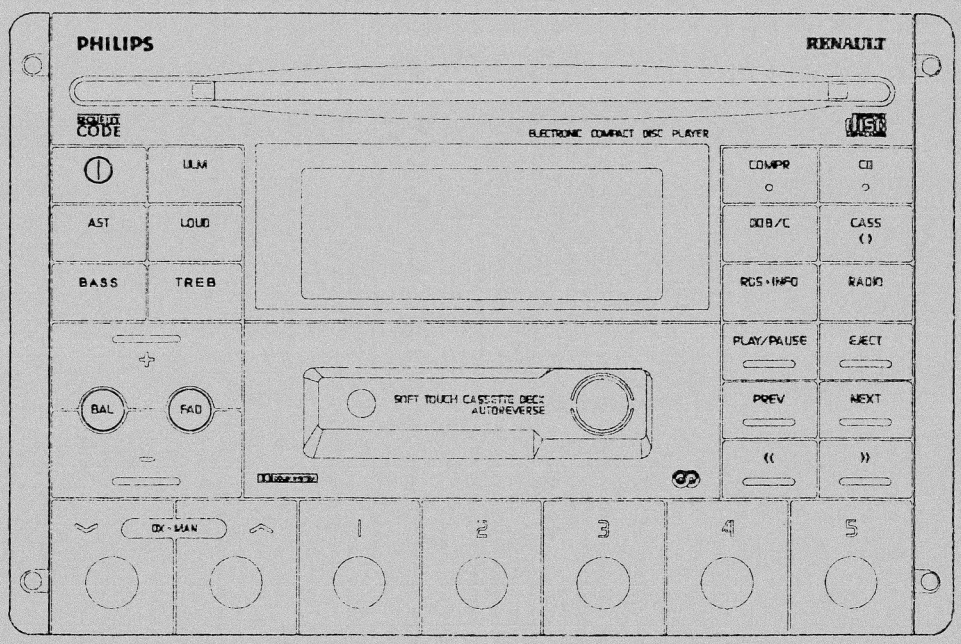

Published by Philips Car Systems Printed in the Netherlands © Copyright reserved Subject to modification

4822 725 24322

PCS 67 801

Contents

page

Contents	-2
Technical data - ESD warning	-3
Controls	-4
Rear view , Connecting	-5
Service hints , Service chips handling	-6
Security code	-7
Checks and adjustments	-8
Technician's remarks	-9
DC Voltages	-10
Block diagram ../62 B	-11-11a
Radio PCB part 1 ../62B Schematic diagram	-12-12a
Radio PCB part 2 ../62B Schematic diagram	-13-13a
Radio PCB part 3 ../62B Schematic diagram	-14-14a
Radio PCB layout	-15-15a
DC 962/62B Micro PCB part 1 schematic diagram	-16-16a
DC 982/62B Micro PCB part 1 schematic diagram	-17-17a
Micro PCB part 2 ../62B Schematic diagram	-18-18a
Micro PCB layout	-19-19a
Front PCB ../62B Schematic diagram	-20-20a
Front PCB layout	-21-21a
Exploded view / Mechanical partslist	-22-22a
Electrical parts-list	-23-23a-24-24a-25-26

Technical data :

Radio	FM 87.5 - 108 MHz , grid: 100KHz search, 50KHz manual MW 531 - 1611 KHz, grid: 9 KHz search, 1 KHz manual LW 144 - 288 KHz, grid: 1 KHz search, 1 KHz manual IF AM 10.7 MHz IF FM 10.7 MHz
Cassette	Deck SCA2.5 Soft Autoreverse 2x2 tracks Wow and Flutter < 0.3%
CD (DC982)	See specification of CD mechanism CMX200
Amplifier	Output power at D = 10%: 4 X 16W at 14.4V supply voltage Equalizer +10/-10dB ± 2dB Loudness 63Hz : 6dB -1/+2dB 1KHz : 0.5dB +2.5dB 10KHz : 4dB -2/+1dB

USE TOGETHER WITH REMOTE DISPLAY 22AP092/62T

ESD

WARNING

All ICs and many other semi-conductors are susceptible to electrostatic discharges (ESD). Careless handling during repair can reduce life drastically.
When repairing, make sure that you are connected with the same potential as the mass of the set via a wrist wrap with resistance. Keep components and tools also at this potential.

Controls

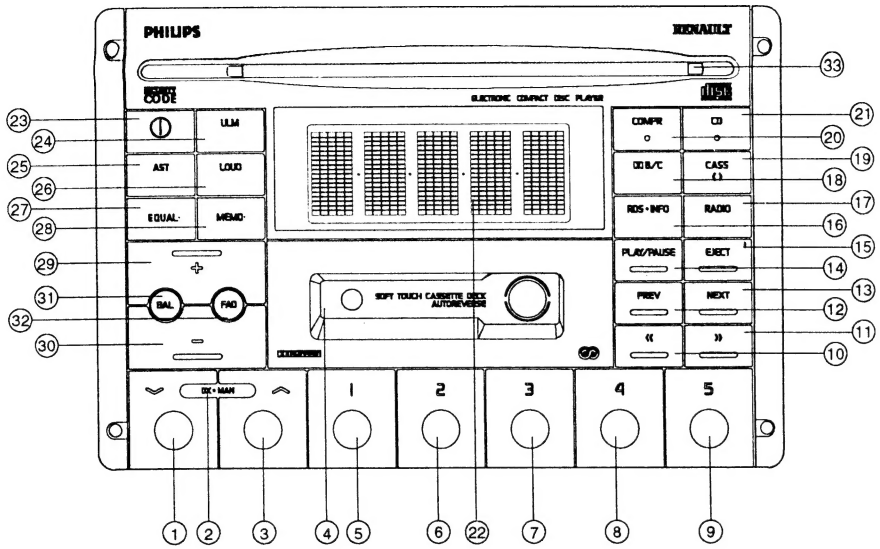

1	SEARCH DOWN	19	CASSETTE REVERSE
2	DX - MAN	20	COMPRESSION
3	SEARCH UP	21	CD MODE SELECTION
4	CASSETTE APERTURE + FLAP	22	DISPLAY
5 to 9	PRESETS	23	ON / OFF
10	FAST REWIND	24	BAND SELECTION
11	FAST FORWARD	25	AUTOSTORE
12	PREVIOUS	26	LOUDNESS
13	NEXT	27	EQUALIZER SELECTION
14	PLAY / PAUSE	28	MEMORISATION EQUALIZER
15	EJECT	29	VOLUME +
16	RDS . INFO	30	VOLUME -
17	RADIO MODE SELECTION	31	BALANCE SELECTION
18	DOLBY B - C	32	FADER SELECTION
		33	CD APERTURE / CD IN PLUG

22DC962/62B
22DC982/62B

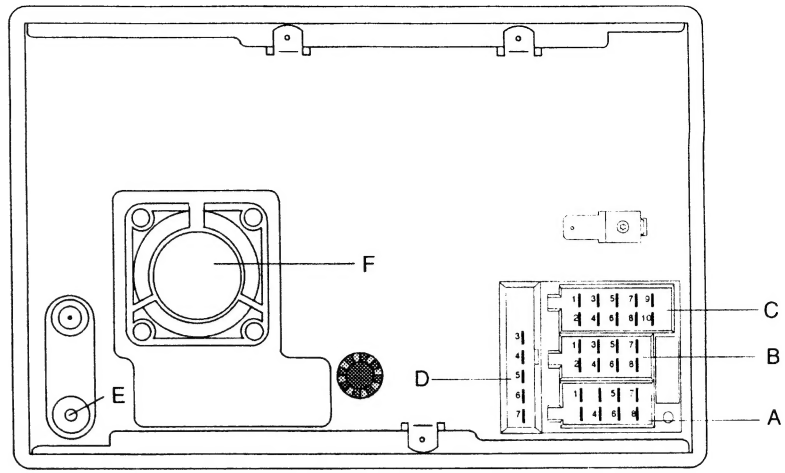

A1	Head phone box status	CONNECTOR A POWER SUPPLY	C3	Mass	CONNECTOR C REMOTE CONTROL
A2	Lighting		C4	Screening mass	
A3	Speach synthesis		C5	Remote control	
A4	Permanent supply		C6		
A5	Aut aerial		C7		
A6	Controlled illumination		C8		
A7	Supply		C9		
A8	Mass		C10		

B1	Rear right +	CONNECTOR B LOUDSPEAKERS	D3	Screening mass	CONNECTOR D REMOTE DISPLAY
B2	Rear right -		D4	Mass	
B3	Front right +		D5	Interruption	
B4	Front right -		D6	I^2C clock	
B5	Front left +		D7	I^2C data	
B6	Front left -		E	Aerial plug	
B7	Rear left +				
B8	Rear left -		F	Fan assy	

22DC962/62B
22DC982/62B

Servicing hints

Removing connectors

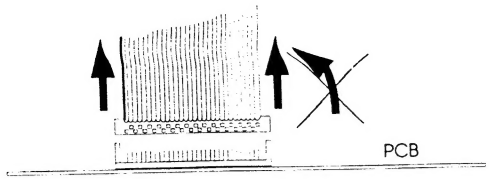

Fan test:

Pressing simultaneously DOLBY and LOUDNESS makes the fan running for 1 minute.

Repair

Display blinking three times when the set is switched on indicates a CD problem.
Display blinking seven times when the set is switched on indicates a cassette problem.

Make sure that you are using remote display 22AP092/62I for testing the set after repair.
If not,some features cannot be tested.

Be carefull not to wedge the wires of the fan in between the chassis and the PCB when remounting the micro PCB.

Be carefull, when remounting the front plate, that the LED's are in good position.

Do not forget to solder the mass between the chassis and the radio PCB when remounting it.

If the regulator item 4901 is to be changed, you must also check the 10Ω resistor item 3376.

HANDLING CHIP COMPONENTS

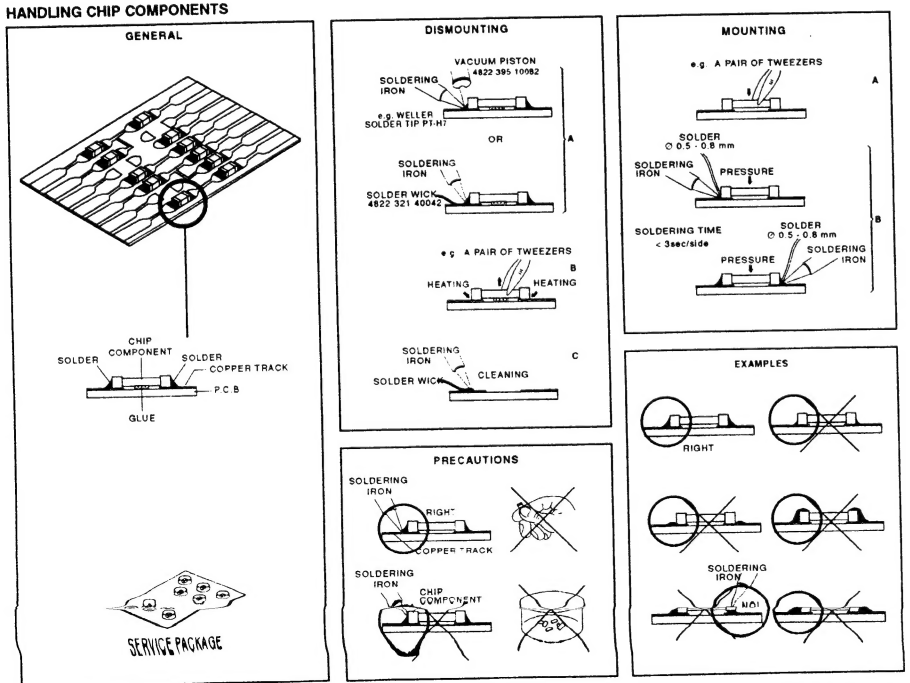

22DC962/62B
22DC982/62B

SECURITY CODE

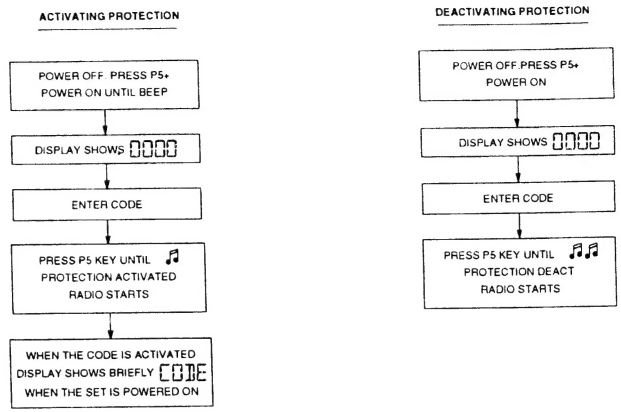

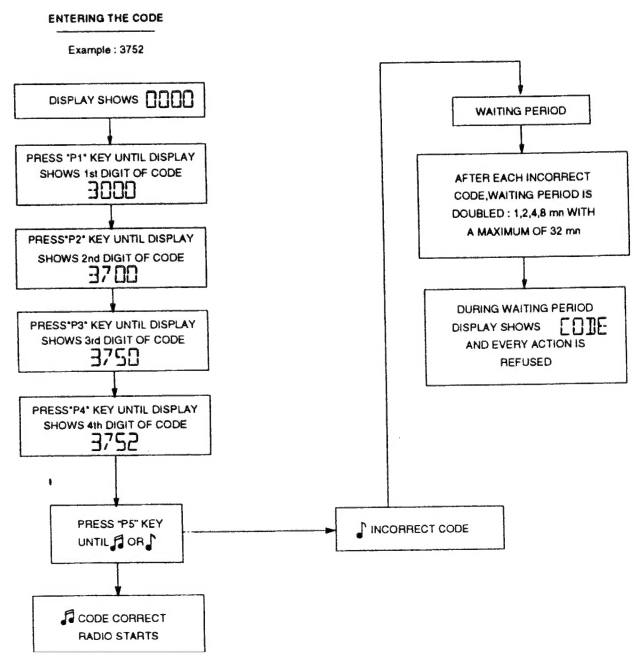

22DC962/62B
22DC982/62B

For checking and adjusting see general procedures

Check	SK				Setting of controls		
Demodulated FM levels	FM	93 MHz 1 mV Δf=22.5 KHz f mod = 1 KHz	B			1 200 mV ± 1 dB	
		93 MHz 1 mV Δf = 6.75 KHz f mod = 19 KHz				1 50 mV ± 1 dB	
		93 MHz 1 mV Δf = 3.75 KHz f mod = 57 KHz				1 20 mV ± 1 dB	
Demodulated AM level	MW	1053 KHz 1 mV 1 KHz, 30% AM	A			250 mV ≤ 2 ≤ 500 mV	
VC FM	FM		B	87.5 MHz		3 > 1.0 V	
				108 MHz		3 < 6.5 V	
VC AM	LW		A	144 KHz		4 > 0.8 V	
	MW			1611 KHz		4 < 6.5 V	
FM limiting Sensivity	FM	93 MHz 15 µV Δf=22.5 KHz f mod = 1 KHz	B			5 1.6V DC ± 0.1 V	
Oscillator voltage	FM		B	98 MHz		7 > 20 mV	
	AM		A	990 KHz		8 > 30 mV	

Adjustment	SK					
Quad detector	FM	93 MHz 40 µV	B	P2 93 MHz	5170	DC between 11 and 15 of 7150 ≤ 200 mV
FM limiting sensivity	FM	93 MHz 15µV Δf = 22.5 KHz f mod = 1 KHz	B	P2 93 MHz	3155	5 1.6 V DC ± 0.1 V
Sensivity search AM	MW	990 KHz 70µV unmodulated	A	P1 990 KHz	3175	9 1.75 V DC ± 0.1V

22DC962/62B
22DC982/62B

Technician's remarks

22DC962/62B
22DC982/62B

DC VOLTAGES

1054 IAC7 THIFI

2 = 3.3 VV
4 = 4.3 V
5 = 5.0 V
6 = 7.9 V
7 = 8.3V
8 = GND

1100 TUNER MODULE

1 = GND
2 = 0.0 V
3 = GND
4 = 0.0 V
5 = 1.8 V FM / 0.0 V AM
6 = 8.5 V
7 = 1.3 V - 5.7 V
8 = 1.6 V
9 = GND
10 = 1.8 V
11 = 0.0 V
12 = 8.5 V AM / 0.2 V FM
13 = 1.8 V

1200 STEREO THIFI

1 = 0.6 V St / 5.0 V Mono
2 = 3.6 V
3 = 3.6 V
4 = 3.3 V
5 = 3.6 V
6 = GND
7 = 1.2 V FM / 0.7 VAM
8 = 8.1 V
9 = 5.5 V
10 = 5.0 V
11 = 0.0 V FM / 4.7 V FM
12 = 3.6 V
13 = GND
14 = 8.5 V
15 = 3.5 V
16 = 3.5 V
17 = 3.6 V
18 = N.C.
19 =3.6 V
20 = N.C.

1250 DOLBY B/C THIFI

1 = N.C.
2 = N.C.
3 = 6.0 V DBB / 8.5 V DBC
4 = 4.3 V
5 = GND
6 = 4.3 V
7 = 8.5 V
8 = N.C.
9 = N.C.
10 = 4.3 V
12 = N.C.
13 = 4.3 V
14 = 8.4 V
15 = 4.3 V
16 = 4.3 V
18 = 4.3 V

7050 TEA6200

1 = 6.0 V AM
2 = 4.1 V AM
3 = 8.5 V AM
4 = 8.5 V AM
5 = 8.5 V AM
6 = 7.3 V AM
7 = 1.4 V AM
8 = 4.1 V AM
9 = 4.1 V AM
10 = 4.1 V AM
11 = 6.7 V AM
12 = 2.9 V AM
13 = 5.0 V AM
14 = 8.5 V AM / 0.2 V FM
15 = 4.7 V AM
16 = 4.7 V AM
17 = GND
18 = 4.9 V AM
19 = 0.7 V AM
20 = 5.0 V AM

7150 TEA6100

1 = 8.2 V
2 = 0.8 V
3 = 4.4 V
4 = 0.0 V
5 = 0.0 V
6 = 40 KHz
7 = GND
8 = 8.4 V
9 = 5.0 V
10 = 5.0 V
11 = 4.6 V
12 = 4.6 V
13 = 4.6 V
14 = 2.6 V
15 = 4.3 V
16 = 3.0 V
17 = 3.0 V
18 = 3.0 V
19 = 3.0 V
20 = GND

7151 TSA6057

1 = 4 MHz
2 = 4 MHz
3 = 5.0 V
4 = GND
5 = 2.0 V
6 = 2.0 V
7 = 2.0 V
8 = 0.2 V FM / 8.5 V AM
9 = 40 KHz
10 = 5.0 V SDA
11 = 5.0 V SCL
12 = GND
13 = 1.3 V - 5.7 V FM
14 = 2.1 V
15 = 1.9 V - 3.4 V AM
16 = 8.4 V

7552 TEA6310

1 = 5.1 V
2 = GND
3 = 4.3 V
4 = 4.3 V
5 = 4.3 V
6 = 4.3 V
7 = 4.3 V
8 = N.C.
9 = 4.3 V
10 = N.C.
11 = 8.5 V
12 = N.C.
13 = N.C.
14 = 4.3 V
15 = 4.3 V
16 = N.C.
17 = N.C.
18 = GND
19 = N.C.
20 = 4.3 V
21 = N.C.
22 = 4.3 V
23 = 4.3 V
24 = 4.3 V
25 = 4.3 V
26 = 4.3 V
27 = 8.5 V
28 = 5.1 V

7553 HEF 4052B

1 = 4.2 V
2 = 4.3 V
3 = 4.3 V
4 = 4.2 V
5 = 4.2 V
6 = 0.0 V / 5.0 V MUTE
7 = GND
8 = GND
9 = 5.1 V
10 = 0.0 V
11 = 4.3 V
12 = 4.3 V
13 = 4.3 V
14 = 4.3 V
15 = 4.3 V
16 = 8.5 V

7650/7651 TDA7374

1 = 6.9 V
2 = 6.9 V
3 = 14.0 V
4 = 0.7 V
5 = 0.7 V
6 = 0.7 V
7 = 9.4 V
8 =GND
9 = GND
10 = NC
11 =0.7 V
12 =0.7 V
13 = 14.0 V
14 = 6.9 V
15 = 6.9 V

7652 HEF4066

1 = 3.3 V
2 = 3.2 V
3 = GND
4 = GND
5 = GND
6 = GND
7 = GND
8 = GND
9 = GND
10 = GND
11 = GND
12 = GND
13 = 8.5 V / 0.0 V MUTE
14 = 8.5 V

22DC962/62B
22DC982/62B

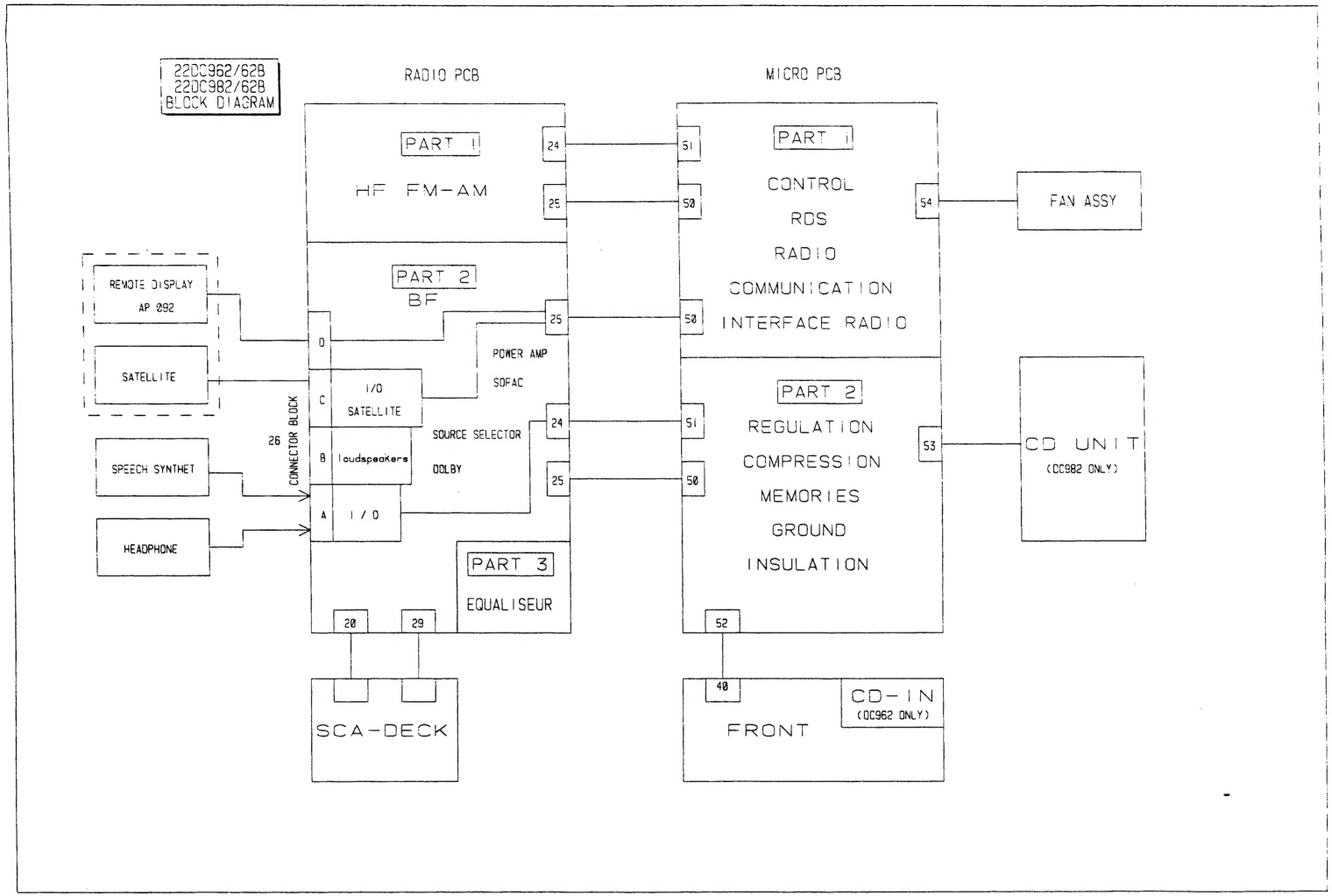
22DC962/62B
22DC982/62B
BLOCK DIAGRAM
RADIO PCB
MICRO PCB
PART 1
HF FM-AM
PART 2
BF
PART 3
EQUALISEUR
POWER AMP
SOFAC
I/O
SATELLITE
loudspeakers
SOURCE SELECTOR
DOLBY
I / O
CONNECTOR BLOCK
26
D
C
B
A
24
25
20
29
REMOTE DISPLAY
AP 092
SATELLITE
SPEECH SYNTHET
HEADPHONE
SCA-DECK
PART 1
CONTROL
RDS
RADIO
COMMUNICATION
INTERFACE RADIO
PART 2
REGULATION
COMPRESSION
MEMORIES
GROUND
INSULATION
51
50
54
53
52
40
FAN ASSY
CD UNIT
(DC982 ONLY)
CD-IN
(DC962 ONLY)
FRONT

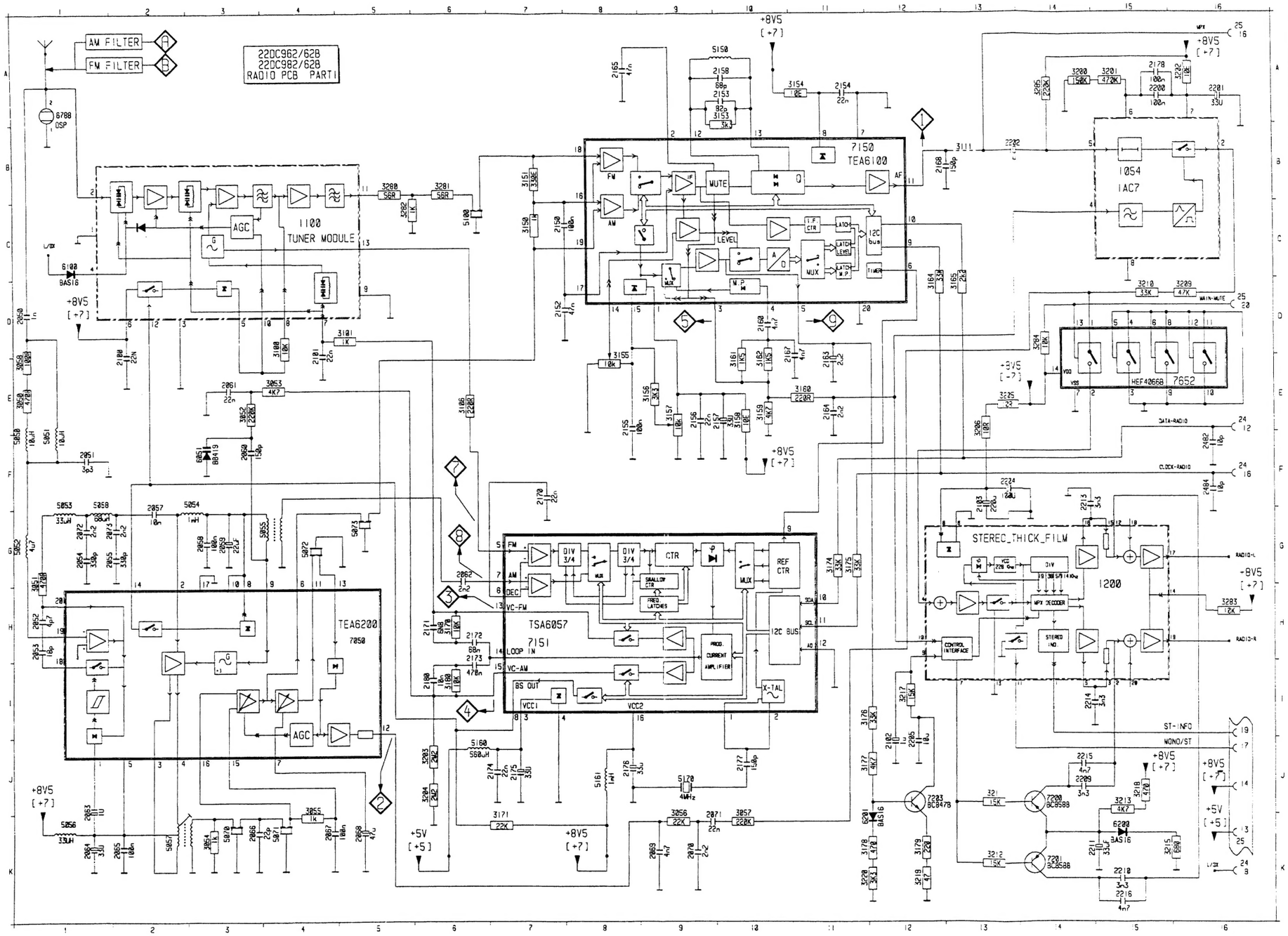
22DC962/62B
22DC982/62B
RADIO PCB PART1
AM FILTER
FM FILTER
6788
DSP
1100
TUNER MODULE
AGC
TEA6200
7050
7150
TEA6100
MUTE
LEVEL
MUX
12C bus
1054
1AC7
7652
HEF40668
MAIN-MUTE
DATA-RADIO
CLOCK-RADIO
STEREO_THICK_FILM
1200
MPX DECODER
STEREO IND.
CONTROL INTERFACE
RADIO-L
RADIO-R
ST-INFO
MONO/ST
TSA6057
7151
DIV 3/4
CTR
REF CTR
SMALLOP CTR
FREQ LATCHES
PROG. CURRENT AMPLIFIER
X-TAL
4MHz
LOOP IN
VC-FM
VC-AM
BS OUT
VCC1
VCC2
+8V5
[+7]
+5V
[+5]

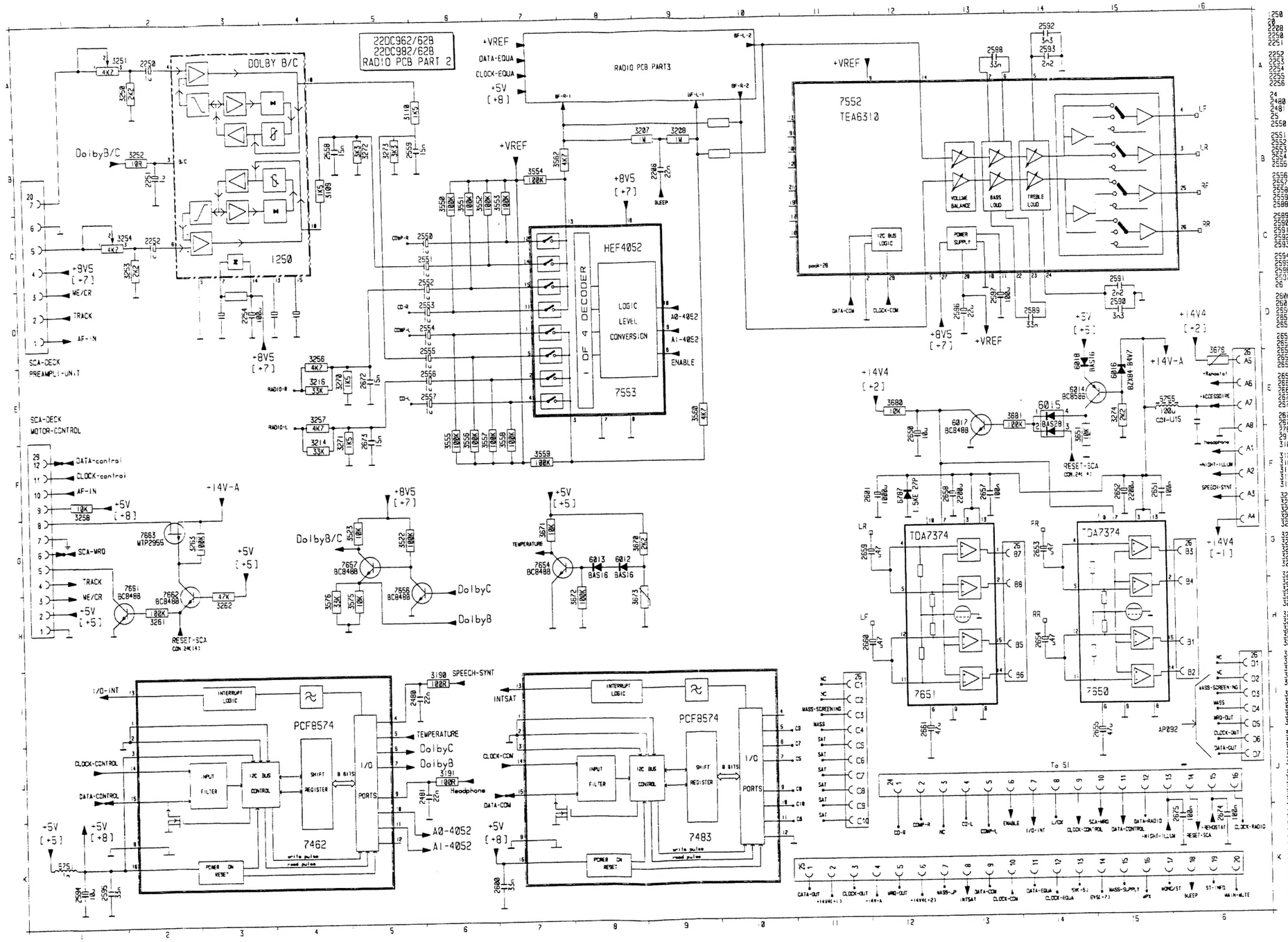
22DC962/62B
22DC982/62B
RADIO PCB PART 2
DOLBY B/C
RADIO PCB PART3
HEF4052
1 OF 4 DECODER
LOGIC LEVEL CONVERSION
7553
7552
TEA6310
VOLUME BALANCE
BASS LOUD
TREBLE LOUD
POWER SUPPLY
I2C BUS LOGIC
SCA-DECK PREAMPLI-UNIT
SCA-DECK MOTOR-CONTROL
TDA7374
7651
7650
PCF8574
7462
7483
INPUT FILTER
I2C BUS CONTROL
SHIFT REGISTER
I/O PORTS
INTERRUPT LOGIC
POWER ON RESET
To 51

22DC962/62B
22DC962/62B
RADIO PCB PART 3

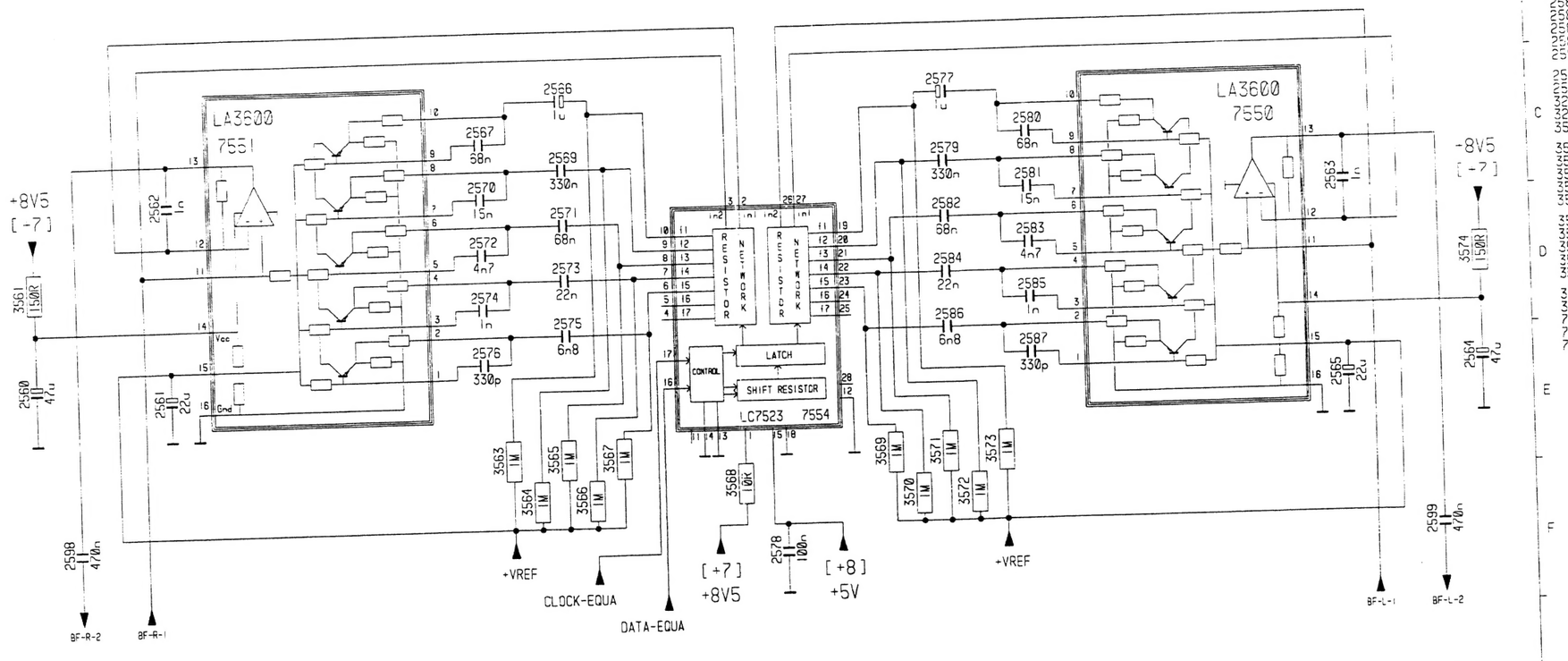

PCB RADIO

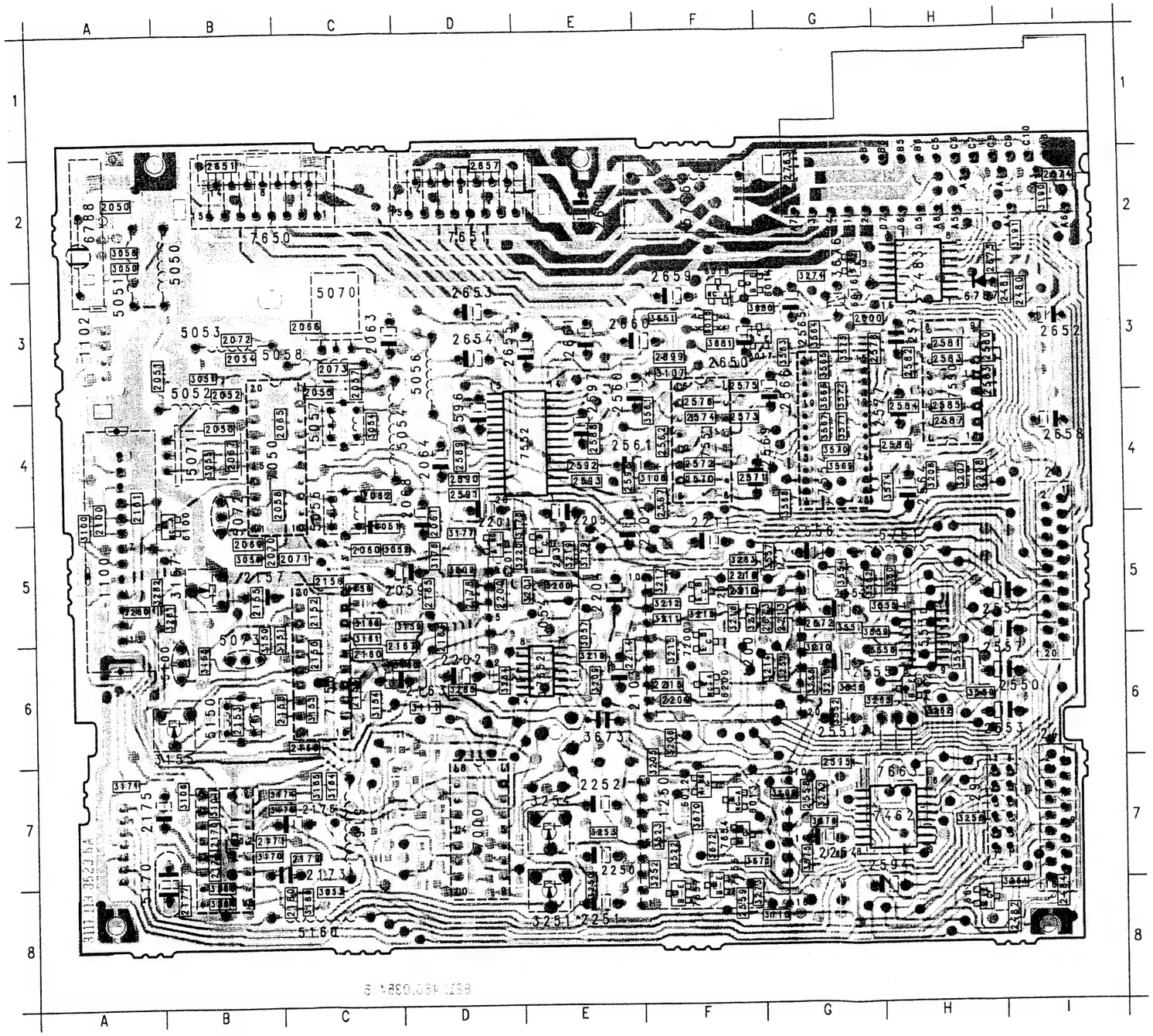

* 22DC962/62E ONLY
22DC982/62E ONLY

1054	5E	2569	4G	3204	8B	5755	2F
1100	5A	2570	4F	3205	7F	6012	7F
1102	3A	2571	4F	3206	6F	6013	7F
1200	6F	2572	4F	3207	4H	6014	3G
1250	7F	2573	4F	3208	4H	6015	3F
2050	2A	2574	4F	3209	6E	6016	3G
2051	3B	2575	3F	3210	6E	6017	3G
2052	3B	2576	4F	3211	5F	6018	2F
2053	4B	2577	4H	3212	5F	6051	5C
2054	3B	2578	3H	3213	5F	6100	5B
2055	3C	2579	3H	3214	6G	6200	6F
2057	3C	2580	3H	3215	6F	6201	5D
2058	4C	2581	3H	3216	6G	6787	3H
2059	5D	2582	3H	3217	5F	6788	2A
2060	5C	2583	3H	3218	5F	7000	7D
2061	5D	2584	4H	3219	5E	7050	4B
2062	4C	2585	4H	3220	5E	7150	6C
2063	3C	2586	4H	3250	8E	7151	7B
2064	4D	2587	4H	3251	8E	7200	6F
2065	4C	2588	4E	3252	7F	7201	5F
2066	3C	2589	4D	3253	7E	7203	5E
2067	4B	2590	4D	3254	7E	7462	7H
2068	4D	2591	4D	3256	6G	7483	3H
2069	5B	2592	4E	3257	6G	7550	3H
2070	5B	2593	4E	3258	7H	7551	4F
2071	5C	2594	7H	3261	8I	7552	4E
2072	3B	2595	7G	3262	6H	7553	6H
2073	3C	2596	4D	3263	6H	7554	4G
2100	4A	2597	3E	3270	6G	7650	2C
2101	4A	2598	4E	3271	5F	7651	2D
2102	5F	2599	3F	3272	7G	7652	6E
2103	6E	2600	3G	3273	8F	7654	7F
2150	6C	2601	2E	3274	3G	7656	7F
2152	5C	2650	3F	3280	5A	7657	8F
2153	6B	2651	2B	3281	5B	7661	8H
2154	6C	2652	3I	3282	5B	7662	6H
2155	5B	2653	3D	3283	5F	7663	7H
2156	5C	2654	3D	3284	6D		
2157	5B	2655	3D	3285	6D		
2158	6C	2657	2D	3522	7F		
2160	6C	2658	4I	3523	7F		
2163	6D	2659	3F	3550	6H		
2164	5D	2660	3E	3551	5G		
2165	5D	2661	3E	3552	6G		
2167	6D	2672	5G	3553	6H		
2168	6C	2673	5G	3554	5G		
2170	7B	2674	2I	3555	5H		
2171	7B	2675	2I	3556	6G		
2172	7C	2763	2G	3557	5G		
2173	7C	3050	2A	3558	6H		
2174	7B	3051	3B	3559	5H		
2175	7A	3052	5D	3560	5H		
2176	7C	3053	8C	3561	4F		
2177	8B	3054	4C	3562	5G		
2178	5D	3055	4B	3563	3G		
2180	8C	3056	5B	3564	3G		
2200	5D	3057	5E	3565	3G		
2201	5D	3058	2A	3566	4G		
2202	6D	3100	5A	3567	4G		
2204	5E	3101	7B	3568	4G		
2205	5E	3106	7B	3569	4G		
2208	4H	3107	3F	3570	4G		
2209	6F	3108	4F	3571	4G		
2210	5F	3109	7G	3572	4G		
2211	5F	3110	8G	3573	3G		
2213	5G	3111	6D	3574	4H		
2214	6E	3150	5B	3575	7G		
2215	6F	3151	5C	3576	7G		
2216	5F	3153	6C	3651	3F		
2250	7E	3154	6C	3670	7F		
2251	8E	3155	6B	3671	7F		
2252	7E	3156	6B	3672	7F		
2254	7G	3157	5B	3673	6E		
2480	3I	3158	5C	3676	2G		
2481	3I	3159	5D	3680	3G		
2482	8I	3160	6D	3681	3F		
2484	8I	3161	5C	5050	2B		
2550	6I	3162	5C	5051	3A		
2551	6G	3164	7C	5052	3B		
2552	5G	3165	7C	5053	3B		
2553	6I	3170	7B	5054	4D		
2554	5I	3171	7A	5055	4C		
2555	6G	3174	7C	5056	3D		
2556	5G	3175	7C	5057	4C		
2557	6I	3176	5D	5058	3C		
2558	7G	3177	5D	5070	3C		
2559	8F	3178	5E	5071	4B		
2560	3E	3179	5E	5072	4B		
2561	4E	3180	8C	5073	5B		
2562	4F	3190	2I	5100	6B		
2563	3H	3191	2I	5150	6B		
2564	4H	3200	5E	5160	8C		
2565	3G	3201	5E	5161	7C		
2566	3G	3202	5D	5170	7A		
2567	4F	3203	7B	5751	5H		

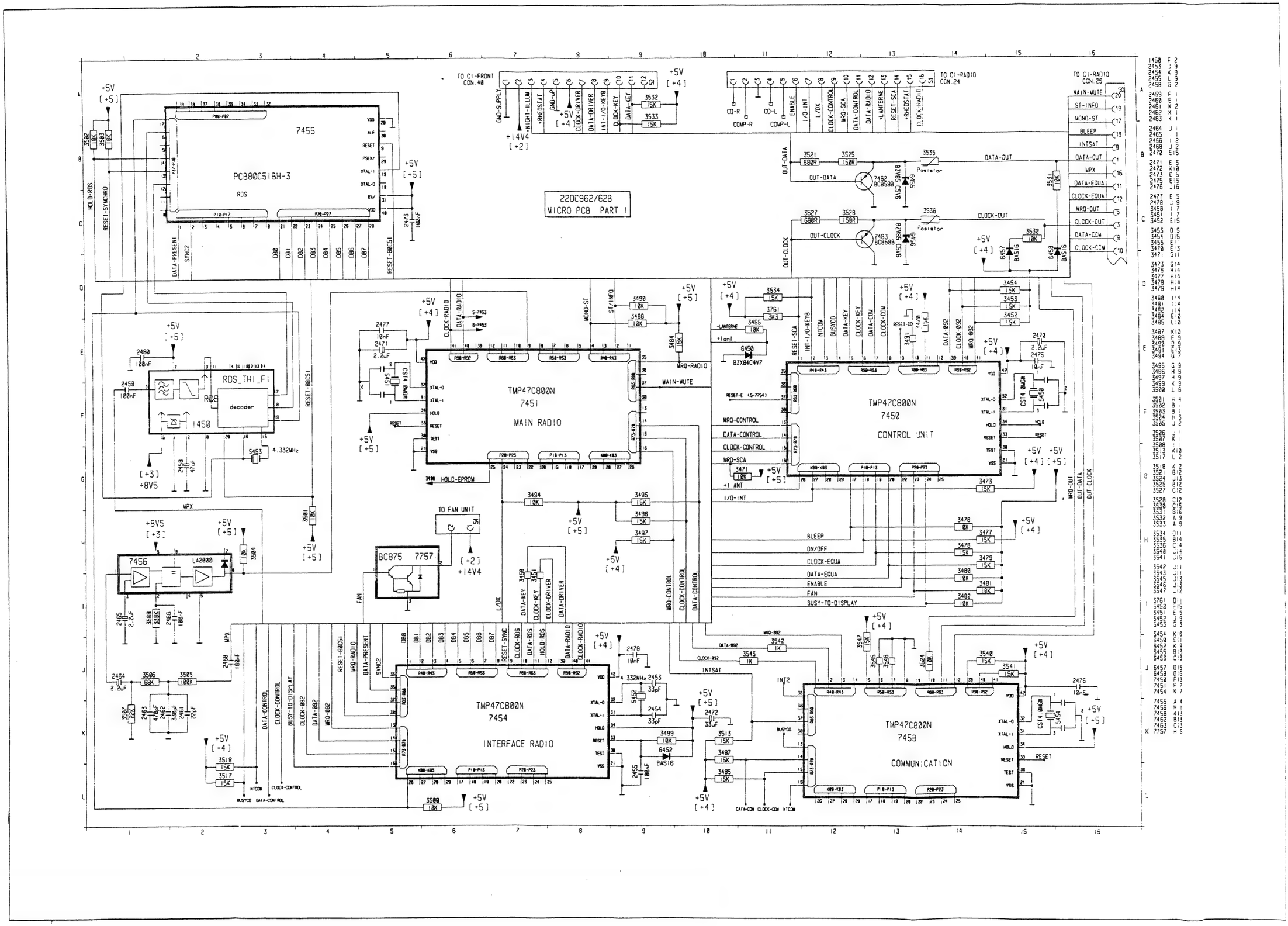
220C962/628
MICRO PCB PART 1
PC880C51BH-3
RDS
7455
RDS_THI_FI
decoder
1450
TMP47C800N
7451
MAIN RADIO
TMP47C800N
7450
CONTROL UNIT
TMP47C800N
7454
INTERFACE RADIO
TMP47C800N
7458
COMMUNICATION
7456
LA2000
BC875 7757
TO FAN UNIT
TO CI-FRONT CON.48
TO CI-RADIO CON.24
TO CI-RADIO CON.25
MAIN-MUTE
ST-INFO
MONO-ST
BLEEP
INTSAT
DATA-OUT
MPX
DATA-EQUA
CLOCK-EQUA
MRQ-OUT
CLOCK-OUT
DATA-COM
CLOCK-COM
OUT-DATA
OUT-CLOCK
Positor
4.332MHz
332MHz
HOLD-EPROM
MRQ-CONTROL
DATA-CONTROL
CLOCK-CONTROL
MRQ-SCA
ON/OFF
ENABLE
FAN
BUSY-TO-DISPLAY
RESET-80C51
RESET-SYNC
DATA-PRESENT
SYNC2
HOLD-RDS
DATA-RADIO
CLOCK-RADIO
MRQ-RADIO
BUSYCO
NTCOM
INT2
+5V [+5]
+5V [+4]
+8V5 [+3]
+14V4 [+2]

PCS 67 816

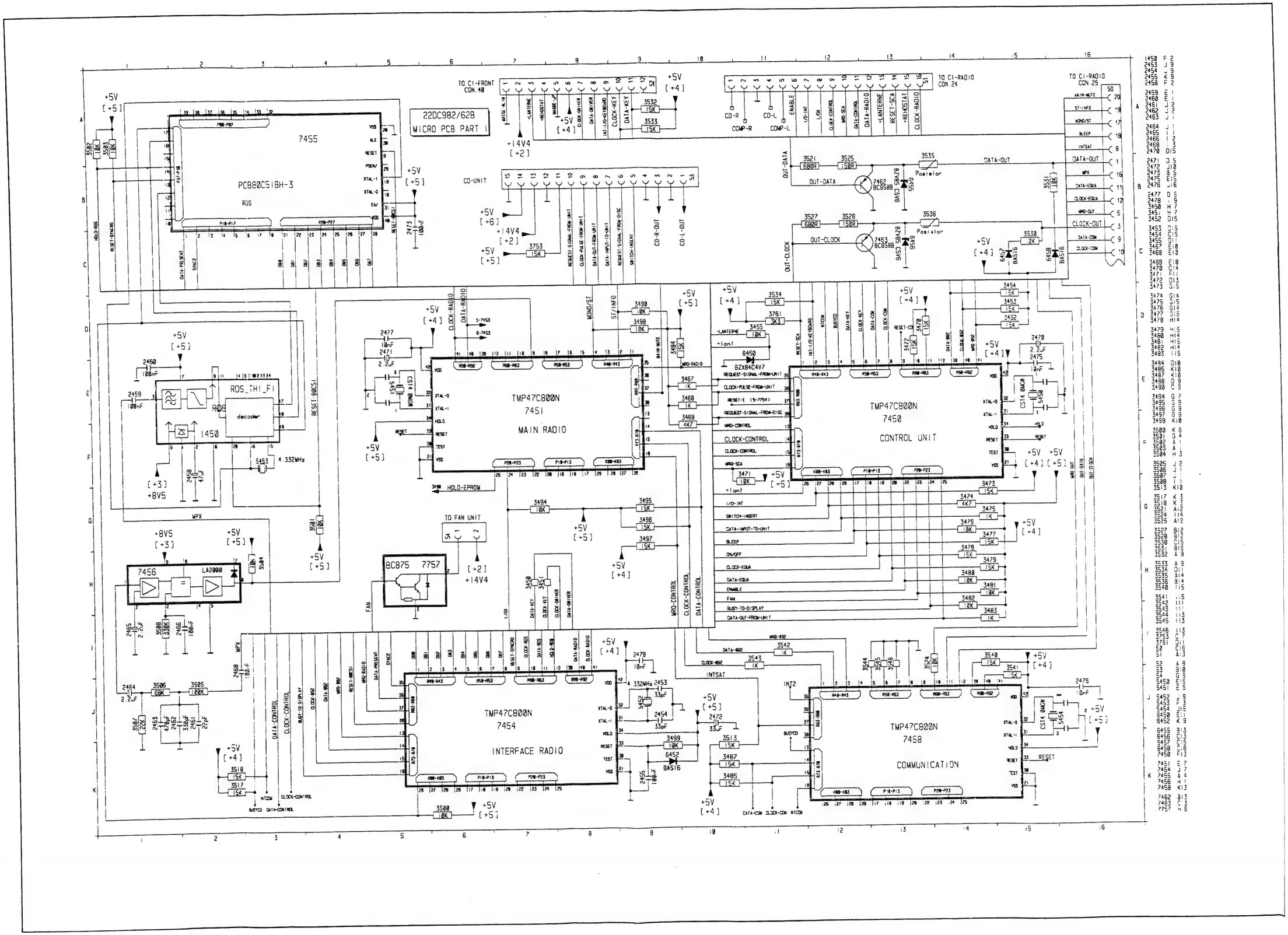
22DC982/62B
MICRO PCB PART I
TO C1-FRONT CON.40
TO C1-RADIO CON.24
TO C1-RADIO CON.25
7455
PCB80C51BH-3
RDS
RDS_THI_FI
decoder
1450
TMP47C800N
7451
MAIN RADIO
TMP47C800N
7450
CONTROL UNIT
TMP47C800N
7454
INTERFACE RADIO
TMP47C800N
7458
COMMUNICATION
7456
LA2000
BC875 7757
TO FAN UNIT
CD-UNIT
OUT-DATA
OUT-CLOCK
DATA-OUT
CLOCK-OUT
CD-R-OUT
CD-L-OUT
HOLD-EPROM
MPX
FAN
INTSAT
RESET

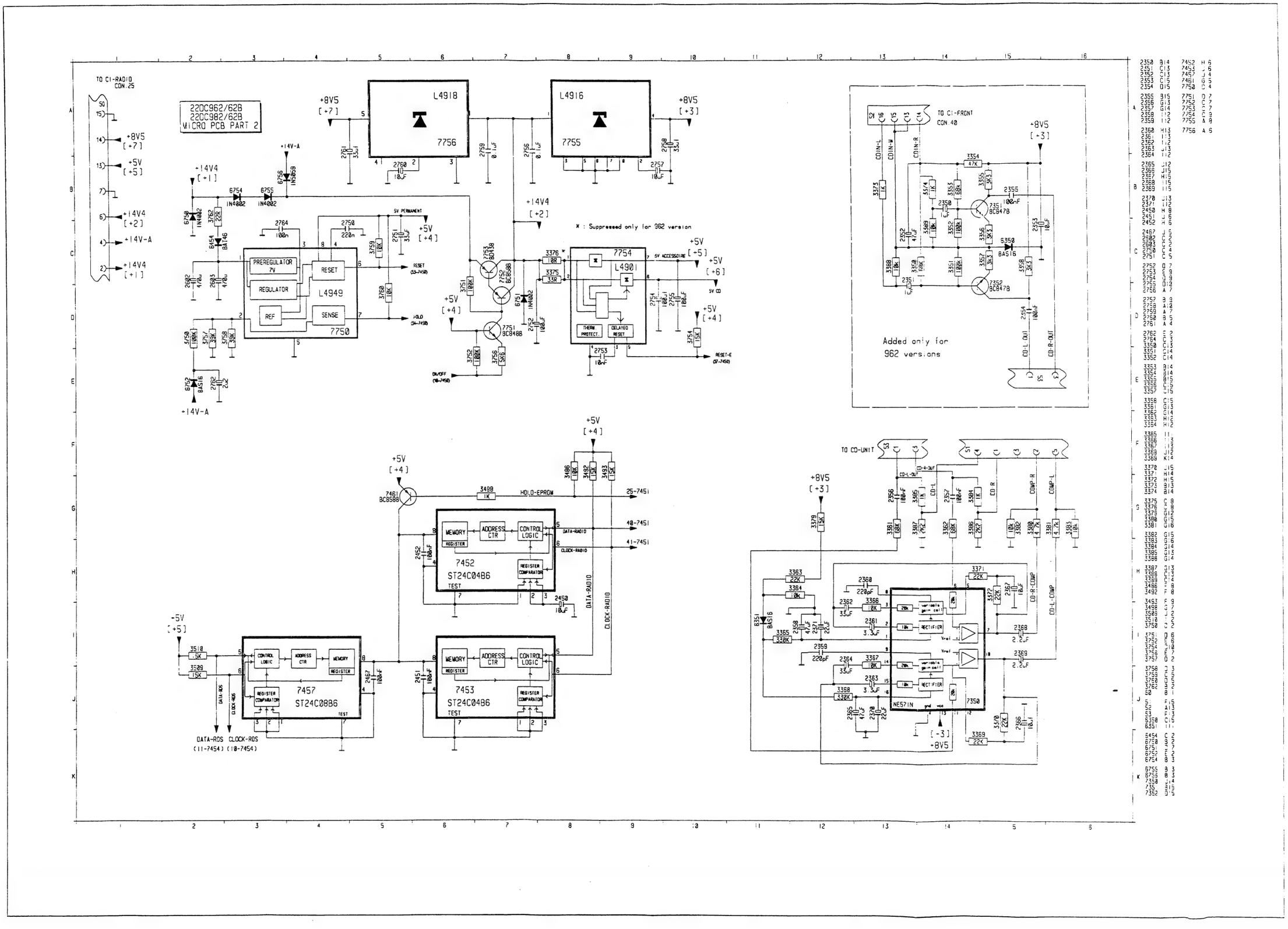
220C962/62B
220C982/62B
MICRO PCB PART 2
TO CI-RADIO CON.25
L4918
7756
L4916
7755
L4949
7750
L4901
7754
PREREGULATOR 7V
REGULATOR
REF
RESET
SENSE
THERM PROTECT.
DELAYED RESET
5V PERMANENT
5V ACCESSOIRE
RESET
HOLD
ON/OFF
RESET-E
* : Suppressed only for 962 version
TO CI-FRONT CON 40
Added only for 962 versions
CD-L-OUT
CD-R-OUT
TO CD-UNIT
HOLD-EPROM
25-7451
40-7451
41-7451
DATA-RADIO
CLOCK-RADIO
7452
ST24C04B6
7453
ST24C04B6
7457
ST24C08B6
MEMORY
REGISTER
ADDRESS CTR
CONTROL LOGIC
REGISTER COMPARATOR
TEST
DATA-ROS
CLOCK-ROS
(11-7454) (10-7454)
NE571N
7350
COMP-R
COMP-L
CD-R-COMP
CD-L-COMP
CD-R
CD-L

PCB MICRO

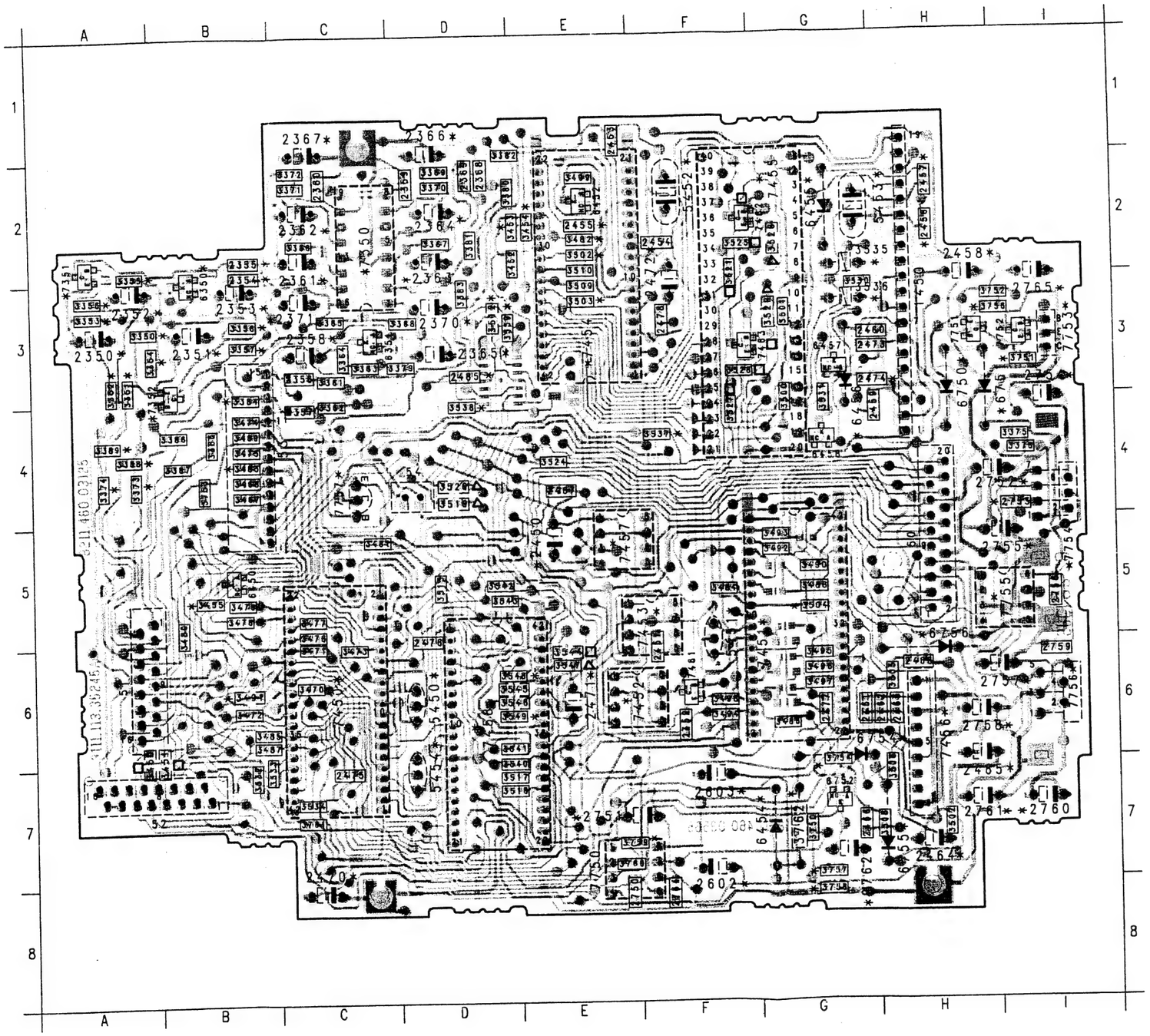

□ (22DC962/62B)ONLY
△ (22DC962/62E)ONLY
* (22DC982/62B)ONLY

1450	3H	3380	2E	3753	4B
2350	3A	3381	2D	3754	6G
2351	3B	3382	1E	3756	3I
2352	3A	3383	3D	3757	7G
2353	3B	3384	3B	3758	8G
2354	2B	3385	4B	3759	7E
2355	2B	3386	4B	3760	7E
2356	3C	3387	4B	3761	7C
2357	4C	3388	4A	3762	7G
2358	3C	3389	4A	5450	6D
2359	2D	3450	6A	5451	5F
2360	2C	3451	6B	5452	2F
2361	2C	3452	2E	5453	2H
2362	2C	3453	2E	5454	7D
2363	2D	3454	2E	6350	2B
2364	2D	3455	5B	6351	3D
2365	3D	3467	4B	6450	5B
2366	1D	3468	4B	6452	2E
2367	1C	3469	4B	6454	7G
2368	2D	3470	6C	6455	2G
2369	2D	3471	6C	6456	4G
2370	3D	3472	6B	6457	3G
2371	3C	3473	6C	6458	4G
2450	5E	3474	4B	6750	3H
2451	6F	3475	4B	6751	3I
2452	6F	3476	5C	6752	7G
2453	1E	3477	5C	6754	6H
2454	2F	3478	5B	6755	7H
2455	2E	3479	5B	6756	5H
2456	2H	3480	5B	7350	2C
2457	2H	3481	5C	7351	2A
2458	2H	3482	2E	7352	3B
2459	4H	3483	4B	7450	6C
2460	3H	3484	5F	7451	6G
2461	6G	3485	6B	7452	6F
2462	6H	3486	6G	7453	5F
2463	6H	3487	6B	7454	3E
2464	7H	3488	5G	7455	2G
2465	7H	3490	5G	7456	6H
2466	7G	3491	6B	7457	5E
2467	4E	3492	5G	7458	6D
2468	6H	3493	5G	7461	6F
2470	8C	3494	6F	7462	2G
2471	6E	3495	6G	7463	3G
2472	3F	3496	6G	7750	8E
2473	3H	3497	6G	7751	3H
2474	3H	3498	6F	7752	3I
2475	7C	3499	2E	7753	3I
2476	5D	3500	3G	7754	5I
2477	6G	3501	3G	7755	5I
2478	3F	3502	2E	7756	6I
2485	3D	3503	3E	7757	4C
2602	8F	3504	5G		
2603	7F	3505	6H		
2750	8E	3506	7H		
2751	7E	3507	7H		
2752	4I	3508	7H		
2753	4I	3509	3E		
2754	4I	3510	2E		
2755	5I	3512	3D		
2756	5I	3513	5D		
2757	6I	3517	7E		
2758	6H	3518	7E		
2759	6I	3519	4D		
2760	7I	3520	4D		
2761	7H	3521	2F		
2762	8G	3524	4E		
2764	8F	3525	2F		
2765	3I	3526	2G		
3350	3A	3527	4F		
3351	3A	3528	3F		
3352	3A	3529	3G		
3353	3A	3530	3G		
3354	3B	3531	3G		
3355	2A	3532	7B		
3356	3A	3533	7B		
3357	3B	3534	7C		
3358	3B	3535	2H		
3361	3C	3536	3H		
3362	4C	3537	4F		
3363	3C	3538	4D		
3364	3C	3539	3E		
3365	3C	3540	6E		
3366	2C	3541	6E		
3367	2D	3542	5D		
3368	3D	3543	5D		
3369	2D	3544	6E		
3370	2D	3545	6E		
3371	2C	3546	6E		
3372	2C	3547	6E		
3373	4A	3548	6E		
3374	4A	3549	6E		
3375	4I	3750	7G		
3376	4I	3751	3I		
3379	3D	3752	3I		

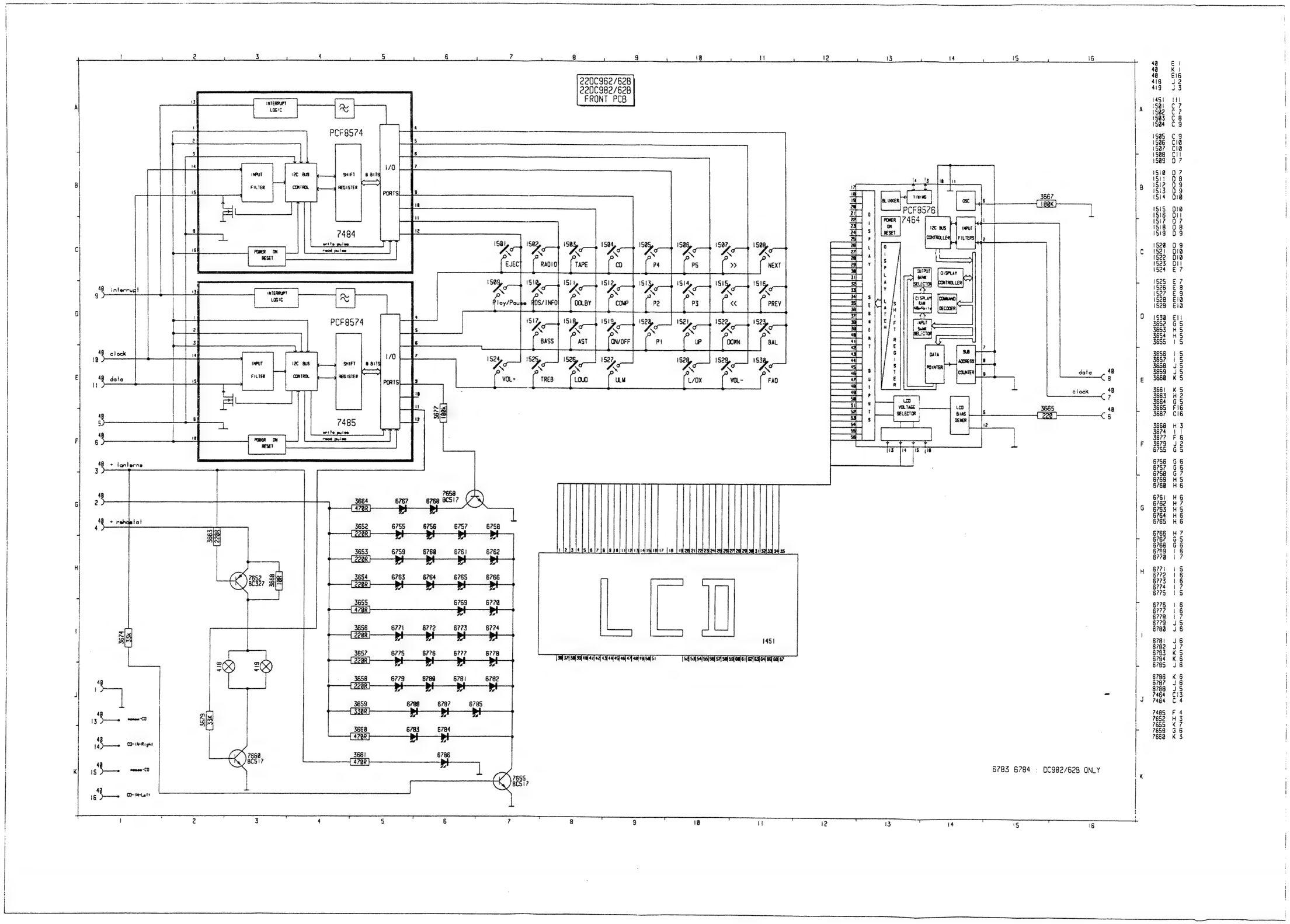
22DC962/628
22DC982/628
FRONT PCB
PCF8574
7484
PCF8574
7485
INTERRUPT LOGIC
INPUT FILTER
I2C BUS CONTROL
SHIFT REGISTER
8 BITS
I/O PORTS
POWER ON RESET
write pulse
read pulse
interrupt
clock
data
+ lanterne
+ rehausse
EJECT
RADIO
TAPE
CD
P4
P5
>>
NEXT
Play/Pause
RDS/INFO
DOLBY
COMP
P2
P3
<<
PREV
BASS
AST
ON/OFF
P1
UP
DOWN
BAL
VOL+
TREB
LOUD
ULM
L/DX
VOL-
FAD
PCF8576
7464
BLINKER
TIMING
OSC
POWER ON RESET
I2C BUS CONTROLLER
INPUT FILTERS
DISPLAY RAM
OUTPUT BANK SELECTOR
DISPLAY CONTROLLER
COMMAND DECODER
INPUT BANK SELECTOR
DATA POINTER
SUB ADDRESS COUNTER
LCD VOLTAGE SELECTOR
LCD BIAS GENER
DISPLAY SEGMENT OUTPUTS
DISPLAY LATCH
SHIFT REGISTER
3667 180K
3665 220
LCD
1451
6783 6784 : DC982/628 ONLY
7658 BC517
7652 BC327
7660 BC517
7655 BC517
3674 33K
3679 33K
3663 220R
3669 10K
3677 180K
3664 470R
3652 220R
3653 220R
3654 220R
3655 470R
3656 220R
3657 220R
3658 220R
3659 330R
3660 470R
3661 470R

PCB FRONT

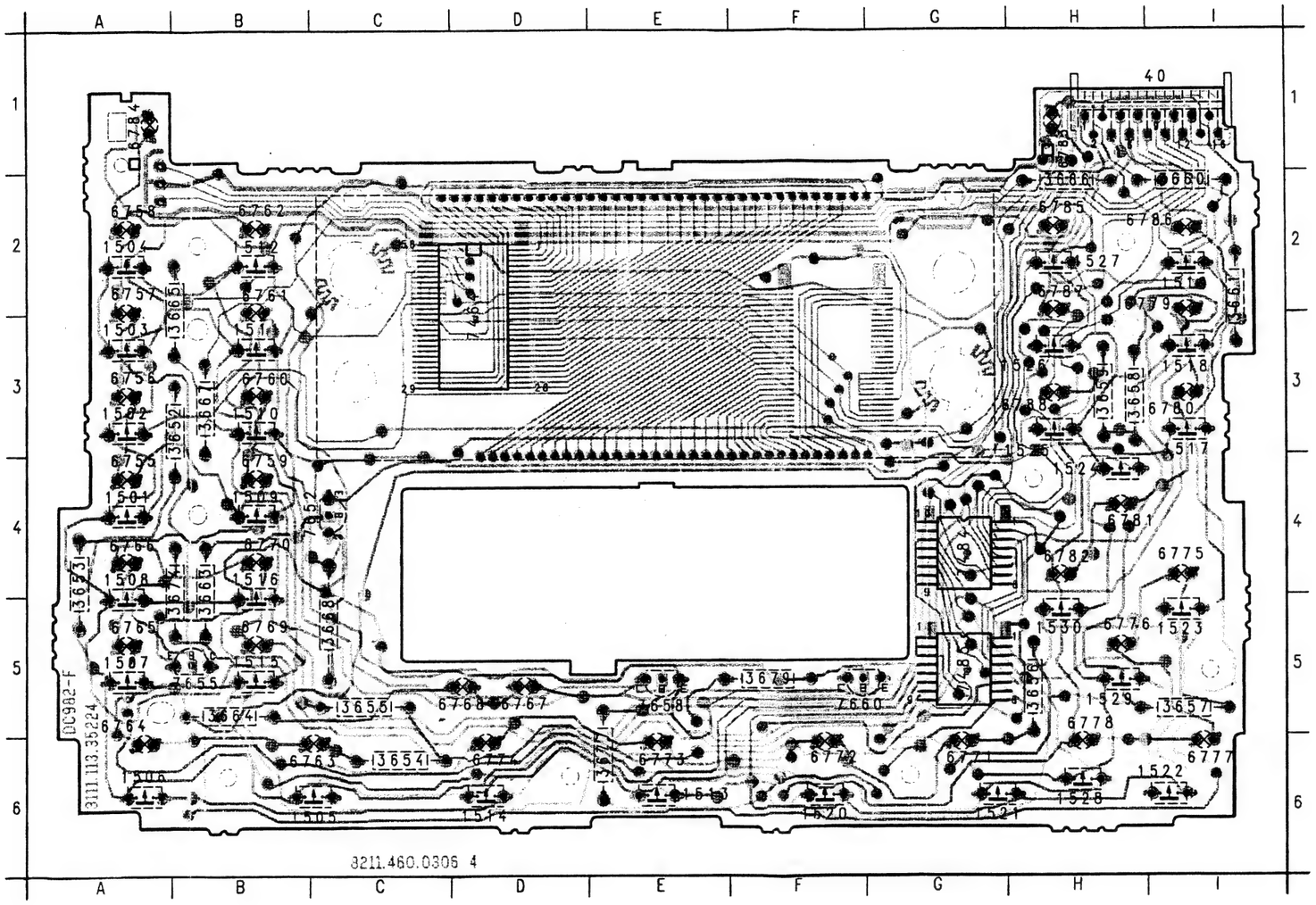

□ 22DC982/62B ONLY

1501 4A
1502 3A
1503 3A
1504 2A
1505 6C

1506 6A
1507 5A
1508 4A
1509 4B
1510 3B

1511 3B
1512 2B
1513 6E
1514 6D
1515 5B

1516 4B
1517 3I
1518 3I
1519 2I
1520 6F

1521 6G
1522 6I
1523 5I
1524 4H
1525 3H

1526 3H
1527 2H
1528 6H
1529 5H
1530 5H

3652 3B
3653 4A
3654 6C
3655 5C
3656 5H

3657 5I
3658 3H
3659 3H
3660 2I
3661 2I

3663 4B
3664 5B
3665 2B
3666 2H
3667 3B

3668 5C
3674 4B
3677 6E
3679 5F
6755 4A

6756 3A
6757 2A
6758 2A
6759 4B
6760 3B

6761 2B
6762 2B
6763 5C
6764 5A
6765 5A

6766 4A
6767 5D
6768 5D
6769 5B
6770 4B

6771 6G
6772 6F
6773 6E
6774 6D
6775 4I

6776 5H
6777 6I
6778 5H
6779 2I
6780 3I

6781 4H
6782 4H
6783 1H
6784 1A
6785 2H

6786 2I
6787 2H
6788 3H
7464 3D
7465 3F

7484 4G
7485 5G
7652 4C
7655 5B
7658 5E

7660 5F

22 DC 982 / 62 B
22 DC 962 / 62 B

MECHANICAL PARTS

Pos	401	4822 459 50657	For 22DC962
	401	4822 459 50656	For 22DC982
	402	4822 492 42231	
	403	4822 443 63509	
	404	4822 130 91051	
	406	4822 691 30254	For 22DC982 only
	408	4822 532 12177	
	409	4822 515 20135	
	413	4822 532 30464	
	414	4822 492 71002	
	416	4822 290 61029	
	418	4822 134 41072	
	419	4822 134 41072	

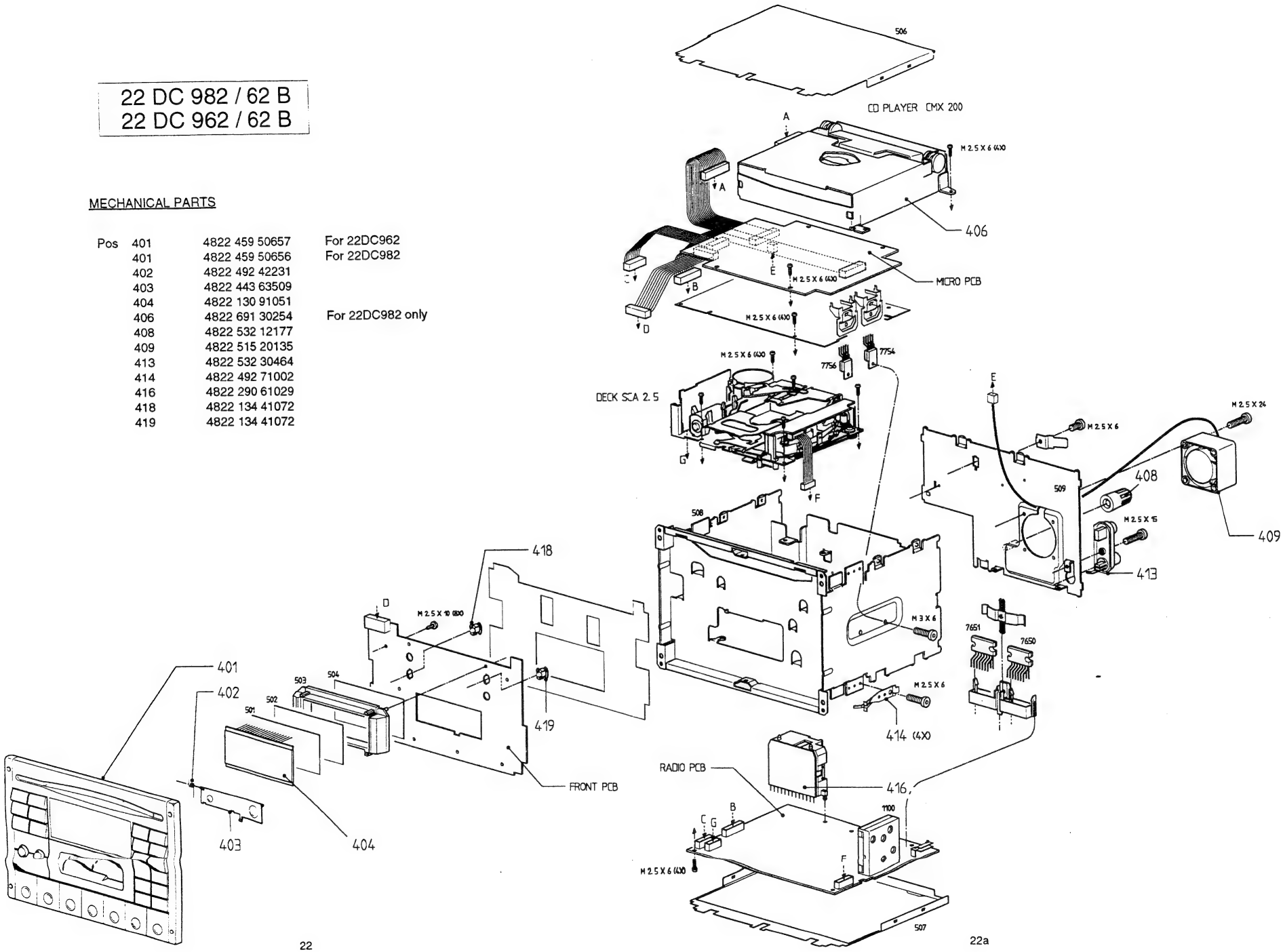

Miscellaneous		
1054	4822 214 51676	I.A.C THICKFILM
1100	4822 210 10305	TUNER
1200	4822 214 51856	ST.D THICKFILM
1250	4822 209 62773	NR9550 THIFI DOLBY
1250	4822 214 52082	DBC3 THICKFILM DOLBY
1450	4822 214 52083	RDS5 THICKFILM
1501	4822 276 13103	SWITCH
1502	4822 276 13103	SWITCH
1503	4822 276 13103	SWITCH
1504	4822 276 13103	SWITCH
1505	4822 276 13103	SWITCH
1506	4822 276 13103	SWITCH
1507	4822 276 13103	SWITCH
1508	4822 276 13103	SWITCH
1509	4822 276 13103	SWITCH
1510	4822 276 13103	SWITCH
1511	4822 276 13103	SWITCH
1512	4822 276 13103	SWITCH
1513	4822 276 13103	SWITCH
1514	4822 276 13103	SWITCH
1515	4822 276 13103	SWITCH
1516	4822 276 13103	SWITCH
1517	4822 276 13103	SWITCH
1518	4822 276 13103	SWITCH
1519	4822 276 13103	SWITCH
1520	4822 276 13103	SWITCH
1521	4822 276 13103	SWITCH
1522	4822 276 13103	SWITCH
1523	4822 276 13103	SWITCH
1524	4822 276 13103	SWITCH
1525	4822 276 13103	SWITCH
1526	4822 276 13103	SWITCH
1527	4822 276 13103	SWITCH
1528	4822 276 13103	SWITCH
1529	4822 276 13103	SWITCH
1530	4822 276 13103	SWITCH

⊣⊢		
2050	5322 122 31647	1NF10%X7R 63V
2051	5322 122 32286	3,3PF 5%NP0 50V
2052	5322 122 32287	4,7PF 5%NP0 50V
2053	5322 122 32965	18PF 5%NPO 50V
2054	5322 122 31863	330PF 5%NP0 50V
2055	5322 122 31863	330PF 5%NP0 50V
2057	5322 122 34098	10NF 10% X7R 0805
2058	4822 122 33496	100NF10%X7R 63V
2059	4822 124 41796	22µF20% 16V
2060	4822 122 33283	150PF 5%NP0 50V
2061	4822 122 33555	22NF10%
2062	4822 122 33175	2,2NF 20% X7R 50V
2063	4822 124 41969	1µF20% 50V
2064	4822 124 40272	33µF20% 16V
2065	4822 122 33496	100NF10%X7R 63V
2066	5322 122 32658	22PF 5% 50V
2067	4822 122 33496	100NF10%X7R 63V
2068	4822 124 23624	47µF20% 16V
2069	5322 126 10223	4,7NF10%X7R 63V
2070	4822 122 33175	2,2NF 20% X7R 50V
2071	4822 122 33555	22NF10%

⊣⊢		
2072	4822 122 33175	2,2NF 20% X7R 50V
2073	4822 122 33175	2,2NF 20% X7R 50V
2100	4822 122 33555	22NF10%
2101	4822 122 33555	22NF10%
2102	4822 124 41969	1µF 20% 50V
2103	4822 124 23768	220µF 20% 10V
2150	4822 122 33496	100NF10%X7R 63V
2152	4822 122 32542	47NF10%X7R 63V
2153	4822 122 33515	82PF 5%NP0 63V
2154	4822 122 33555	22NF10%
2155	4822 122 33496	100NF10%X7R 63V
2156	4822 122 33555	22NF10%
2157	4822 124 40272	33µF20% 16V
2158	4822 122 33514	68PF 5%NP0 50V
2160	5322 126 10223	4,7NF 10% X7R 50V
2163	4822 124 40244	2,2µF20% 63V
2164	4822 122 33175	2,2NF 20% X7R 50V
2165	4822 122 32542	47NF 10% X7R 1206
2167	5322 126 10223	4,7NF 20% X7R 63V
2168	4822 122 33283	150PF 5%NP0 50V
2170	4822 122 33555	22NF10%
2171	5322 122 31866	6,8NF10%X7R 63V
2172	4822 122 32891	68NF10%X7R 63V
2173	4822 121 51252	470NF 5% 63V
2174	4822 122 33555	22NF10%
2175	4822 124 40272	33µF20% 16V
2176	4822 124 40272	33µF20% 16V
2177	4822 122 33283	150PF 5%NP0 50V
2178	4822 122 33496	100NF10%X7R 63V
2180	4822 122 33177	10NF 20% X7R 50V
2200	4822 122 33496	100NF10%X7R 63V
2201	4822 124 40272	33µF20% 16V
2202	4822 124 41969	1µF 20% 50V
2204	4822 124 23432	100µF20% 10V
2205	4822 124 22403	10µF 20% 16V
2208	4822 122 33555	22NF10%
2209	4822 122 33585	3,3NF10%
2210	4822 122 33585	3,3NF10%
2211	4822 124 40272	33µF20% 16V
2213	4822 122 33585	3,3NF10%
2214	4822 122 33585	3,3NF10%
2215	5322 126 10223	4,7NF10%X7R 63V
2216	5322 126 10223	4,7NF10%X7R 63V
2250	4822 124 41969	1µF20% 50V
2251	4822 124 41969	1µF20% 50V
2252	4822 124 41969	1µF20% 50V
2253	4822 124 41969	1µF20% 50V
2254	4822 124 23432	100µF20% 10V
2255	4822 124 23432	100µF20% 10V
2256	4822 124 23432	100µF20% 10V
2350#	4822 124 41969	1µF20% 50V
2351#	4822 124 41969	1µF20% 50V
2352#	4822 124 23624	47µF20% 16V
2353#	4822 124 22403	10µF 20% 16V
2354#	4822 122 33496	100NF10%X7R 63V
2355#	4822 122 33496	100NF10%X7R 63V
2356	4822 122 33496	100NF10%X7R 63V
2357	4822 122 33496	100NF10%X7R 63V
2358	4822 124 23624	47µF20% 16V
2359	4822 122 33584	220PF 5%

22DC962/62B 22DC982/62B

⊣⊢		
2360	4822 122 33584	220PF 5%
2361	4822 124 23767	3.3µF20% 50V
2362	4822 124 40272	33µF20% 16V
2363	4822 124 23767	3.3µF20% 50V
2364	4822 124 40272	33µF20% 16V
2365	4822 124 23624	47µF20% 16V
2366	4822 124 22403	10µF 20% 16V
2367	4822 124 22403	10µF 20% 16V
2368	4822 124 11355	SMC 2,2µF 6,3V 20%
2369	4822 124 11355	SMC 2,2µF 6,3V 20%
2370	4822 124 41796	22µF20% 16V
2371	4822 124 41796	22µF20% 16V
2450	4822 124 22403	10µF 20% 16V
2451	4822 122 33496	100NF10%X7R 63V
2452	4822 122 33496	100NF10%X7R 63V
2453	5322 122 32659	33PF 5% 50V
2454	5322 122 32659	33PF 5% 50V
2455	4822 122 33496	100NF10%X7R 63V
2458	4822 124 23624	47µF20% 16V
2459	4822 122 33496	100NF10%X7R 63V
2460	4822 122 33496	100NF10%X7R 63V
2461	5322 122 32658	22PF 5% 50V
2462	5322 122 31863	330PF 5%NP0 50V
2463	5322 122 32268	470PF 10% 50V
2464	4822 124 40244	2,2µF20% 63V
2465	4822 124 40244	2,2µF20% 63V
2466	4822 122 33496	100NF10%X7R 63V
2467	4822 122 33496	100NF10%X7R 63V
2468	4822 122 33496	100NF 10% 63V 1206
2470	4822 124 40244	2,2µF20% 63V
2471	4822 124 40244	2,2µF20% 63V
2472	4822 124 40272	33µF 20% 16V
2473	4822 122 33496	100NF10%X7R 63V
2475	4822 122 33177	10NF 10% X7R 0805
2476	4822 122 33177	10NF 10% X7R 0805
2477	4822 122 33177	10NF 10% X7R 0805
2478	4822 122 33177	10NF 10% X7R 0805
2480	4822 122 33555	22NF10%
2481	4822 122 33555	22NF10%
2482	5322 122 32448	10PF 5% 50V
2484	5322 122 32448	10PF 5% 50V
2550	4822 124 41969	1µF 20% 50V
2551	4822 124 41969	1µF 20% 50V
2552	4822 124 41969	1µF 20% 50V
2553	4822 124 41969	1µF 20% 50V
2554	4822 124 41969	1µF 20% 50V
2555	4822 124 41969	1µF 20% 50V
2556	4822 124 41969	1µF 20% 50V
2557	4822 124 41969	1µF 20% 50V
2558	4822 122 33128	15NF10%X7R 63V
2559	4822 122 33128	15NF10%X7R 63V
2560	4822 124 23624	47µF 20% 16V
2561	4822 124 41796	22µF 20% 16V
2562	5322 122 31647	1NF 10% X7R 1206
2563	5322 122 31647	1NF 10% X7R 1206
2564	4822 124 23624	47µF 20% 16V
2565	4822 124 41796	22µF 20% 16V
2566	4822 124 41969	1µF 20% 50V
2567	4822 122 32891	68NF 10% X7R 1206
2569	5322 121 42661	330NF 10% 63V

⊣⊢		
2570	4822 122 33128	15NF 10% X7R 0805
2571	4822 122 32891	68NF 10% X7R 1206
2572	5322 126 10223	4N7 10% X7R 0805
2573	4822 122 33555	22NF 10% X7R 0805
2574	5322 122 31647	1NF 10% X7R 1206
2575	5322 122 31866	6N8 10% X7R 0805
2576	5322 122 31863	330P 5% NP0 0805
2577	4822 124 41969	1µF 20% 50V
2578	4822 122 33496	100NF10%X7R 63V
2579	5322 121 42661	330NF 10% 63V
2580	4822 122 32891	68N 10% X7R 1206
2581	4822 122 33128	15N 10% X7R 0805
2582	4822 122 32891	68N 10% X7R 1206
2583	5322 126 10223	4N7 10% X7R 0805
2584	4822 122 33555	22N 10% X7R 0805
2585	5322 122 31647	1N 10% X7R 1206
2586	5322 122 31866	6N8 10% X7R 0805
2587	5322 122 31863	330P 5% NP0 0805
2588	4822 122 31981	33NF+-0,5PF 50V
2589	4822 122 31981	33NF+-0,5PF 50V
2590	4822 122 33585	3,3NF10%
2591	4822 122 33175	2,2NF 20% X7R 50V
2592	4822 122 33585	3,3NF10%
2593	4822 122 33175	2,2NF 20% X7R 50V
2594	4822 124 22403	10µF 20% 16VV
2595	4822 122 31981	33NF 10% X7R 1206
2596	4822 124 41796	22µF20% 16V
2597	4822 124 23432	100µF20% 10V
2598	4822 122 33325	470NF +80-20% 1206
2599	4822 122 33325	470NF +80-20% 1206
2600	4822 122 31981	33NF 10% X7R 1206
2601	4822 124 40201	1000µF 20% 16V
2602	4822 124 41009	470µF 20% 16V
2603	4822 124 41009	470µF 20% 16V
2650	4822 124 22403	10µF 20% 16V
2651	4822 122 33496	100NF10%X7R 63V
2652	4822 124 22412	2200µF 20% 16V
2653	5322 124 41948	470N+-20% 50V
2654	5322 124 41948	470N+-20% 50V
2655	4822 124 23624	47µF20% 16V
2657	4822 122 33496	100NF10%X7R 63V
2658	4822 124 22412	2200µF 20% 16V
2659	5322 124 41948	470N+-20% 50V
2660	5322 124 41948	470N+-20% 50V
2661	4822 124 23624	47µF20% 16V
2672	4822 122 33128	15NF10%X7R 63V
2673	4822 122 33128	15NF10%X7R 63V
2674	4822 122 33496	100NF10%X7R 63V
2675	4822 122 33496	100NF10%X7R 63V
2750	4822 122 32916	220NF 20% X7R 1210
2751	4822 124 40272	33µF20% 16V
2752	4822 124 41643	100µF 20% 16V
2753	4822 122 33177	10NF 20% X7R 50V
2754	4822 124 23432	100µF 20% 10V
2755	4822 124 23432	100µF 20% 10V
2756	4822 122 33496	100NF10%X7R 63V
2757	4822 124 22403	10µF 20% 16V
2758	4822 124 40272	33µF 20% 10V
2759	4822 122 33496	100NF10%X7R 63V
2760	4822 124 22403	10µF 20% 16V

22DC962/62B 22DC982/62B

2761	4822 124 40272	33µF 20% 16V
2762	4822 124 40244	2.2µF 20% 50V
2764	4822 122 33496	100NF 10% 63V 1206

3050	4822 051 20471	470Ω00 5% 0,1W
3051	4822 051 20471	470Ω00 5% 0,1W
3052	4822 051 20224	220KΩ 5% 0,1W
3053	4822 051 20472	4KΩ70 5% 0,1W
3054	4822 051 20102	1KΩ00 5% 0,1W
3055	4822 051 20102	1KΩ00 5% 0,1W
3056	4822 051 20223	22KΩ00 5% 0,1W
3057	4822 051 20224	220KΩ00 5% 0,1W
3058	4822 051 20101	100Ω00 5% 0,1W
3100	4822 051 20103	10KΩ00 5% 0,1W
3101	4822 051 20102	1KΩ00 5% 0,1W
3106	4822 051 20221	220Ω00 5% 0,1W
3109	4822 051 20152	1KΩ5 5% 0,1W
3110	4822 051 20152	1KΩ5 5% 0,1W
3111	4822 051 10008	0Ω00 5% 0,25W
3150	4822 051 20102	1KΩ00 5% 0,1W
3151	4822 051 20331	330Ω00 5% 0,1W
3153	4822 051 20332	3KΩ30 5% 0,1W
3154	4822 051 20109	10Ω00 5% 0,1W
3155	4822 100 20166	10KΩ30%LIN 0,1W
3156	4822 051 20332	3KΩ30 5% 0,1W
3157	4822 100 20166	10KΩ 30%LIN 0,1W
3158	4822 051 20109	10Ω00 5% 0,1W
3159	4822 051 20472	4KΩ70 5% 0,1W
3160	4822 051 20221	220Ω00 5% 0,1W
3161	4822 051 20152	1KΩ50 5% 0,1W
3162	4822 051 20152	1KΩ50 5% 0,1W
3164	4822 051 20333	33KΩ00 5% 0,1W
3165	4822 051 20222	2KΩ20 5% 0,1W
3170	4822 051 20103	10KΩ00 5% 0,1W
3171	4822 051 20223	22KΩ00 5% 0,1W
3174	4822 051 20333	33KΩ00 5% 0,1W
3175	4822 051 20333	33KΩ00 5% 0,1W
3176	4822 051 20333	33KΩ00 5% 0,1W
3177	4822 051 20472	4KΩ70 5% 0,1W
3178	4822 051 20471	470Ω00 5% 0,1W
3179	4822 051 20221	220Ω00 5% 0,1W
3180	4822 051 20103	10KΩ00 5% 0,1W
3190	4822 051 20101	100Ω00 5% 0,1W
3191	4822 051 20101	100Ω00 5% 0,1W
3200	4822 051 20154	150KΩ00 5% 0,1W
3201	4822 051 20474	470KΩ00 5% 0,1W
3202	4822 051 20109	10Ω00 5% 0,1W
3203	4822 051 20225	2M2 5% 0,1W
3204	4822 051 20225	2M2 5% 0,1W
3205	4822 051 20109	10Ω00 5% 0,1W
3206	4822 051 20109	10Ω00 5% 0,1W
3207	4822 051 20105	1M 5% 0805
3208	4822 051 20105	1M 5% 0805
3209	4822 051 20473	47KΩ00 5% 0,1W
3210	4822 051 20333	33KΩ00 5% 0,1W
3211	4822 051 20153	15KΩ00 5% 0,1W
3212	4822 051 20153	15KΩ00 5% 0,1W
3213	4822 051 20472	4KΩ70 5% 0,1W
3214	4822 051 20333	33KΩ 5% 0805

3215	4822 051 20681	680Ω00 5% 0,1W
3216	4822 051 20333	33KΩ00 5% 0,1W
3217	4822 051 20153	15KΩ00 5% 0,1W
3218	4822 051 20471	470Ω00 5% 0,1W
3219	4822 051 20479	47Ω00 5% 0,1W
3220	4822 051 20332	3KΩ30 5% 0,1W
3250	4822 051 20222	2KΩ20 5% 0,1W
3251	4822 100 11319	4KΩ7
3252	4822 051 20109	10Ω 5% 0,1W
3253	4822 051 20222	2KΩ20 5% 0,1W
3254	4822 100 11319	4KΩ7
3255	4822 051 20103	10KΩ00 5% 0,1W
3256	4822 051 20472	4KΩ7 5% 0805
3257	4822 051 20472	4KΩ7 5% 0805
3258	4822 051 20103	10KΩ00 5% 0,1W
3261	4822 051 20104	100KΩ 5% 0805
3262	4822 051 20473	47KΩ 5% 0805
3263	4822 051 20104	100KΩ 5% 0805
3270	4822 051 20152	1KΩ50 5% 0,1W
3271	4822 051 20152	1KΩ50 5% 0,1W
3272	4822 051 20332	3KΩ3 5% 0,1W
3273	4822 051 20332	3KΩ3 5% 0,1W
3274	4822 051 20222	2KΩ2 5% 0805
3280	4822 051 20569	56Ω 5% 0805
3281	4822 051 20569	56Ω 5% 0805
3282	4822 051 20102	1KΩ 5% 0805
3283	4822 051 20103	10KΩ 5% 0805
3284	4822 051 20103	10KΩ 5% 0805
3285	4822 051 20224	220KΩ 5% 0805
3350#	4822 051 20683	68KΩ00 5% 0,1W
3351#	4822 051 20103	10KΩ00 5% 0,1W
3352#	4822 051 20103	10KΩ00 5% 0,1W
3353#	4822 051 20683	68KΩ00 5% 0,1W
3354#	4822 051 20473	47KΩ 5% 0805
3355#	4822 051 20332	3KΩ3 5% 0,1W
3356#	4822 051 20332	3KΩ3 5% 0,1W
3357#	4822 051 20332	3KΩ3 5% 0,1W
3358#	4822 051 20332	3KΩ3 5% 0,1W
3361	4822 051 20683	68KΩ00 5% 0,1W
3362	4822 051 20683	68KΩ00 5% 0,1W
3363	4822 051 20223	22KΩ00 5% 0,1W
3364	4822 051 20103	10KΩ00 5% 0,1W
3365	4822 051 20334	330KΩ00 5% 0,1W
3366	4822 051 20103	10KΩ00 5% 0,1W
3367	4822 051 20103	10KΩ00 5% 0,1W
3368	4822 051 20334	330KΩ00 5% 0,1W
3369	4822 051 20223	22KΩ00 5% 0,1W
3370	4822 051 20223	22KΩ00 5% 0,1W
3371	4822 051 20223	22KΩ00 5% 0,1W
3372	4822 051 20223	22KΩ00 5% 0,1W
3373#	4822 051 20102	1KΩ 5% 0805
3374#	4822 051 20102	1KΩ 5% 0805
3375	4822 051 20339	33Ω00 5% 0,1W
3376*	4822 051 20109	10Ω00 5% 0,1W
3379	4822 051 20153	15KΩ00 5% 0,1W
3380	4822 051 20472	4KΩ7 5% 0,1W
3381	4822 051 20472	4KΩ7 5% 0,1W
3382	4822 051 20103	10KΩ 5% 0,1W
3383	4822 051 20103	10KΩ 5% 0,1W
3384	4822 051 20102	1KΩ 5% 0805

22DC962/62B 22DC982/62B

3385	4822 051 20102	1KΩ 5% 0805
3386	4822 051 20222	2KΩ2 5% 0805
3387	4822 051 20222	2KΩ2 5% 0805
3388#	4822 051 20103	10KΩ00 5% 0,1W
3389#	4822 051 20103	10KΩ00 5% 0,1W
3450	4822 051 20008	JUMPER OΩO5
3451	4822 051 10008	CHIP JUMPER
3452	4822 051 20153	15KΩ00 5% 0,1W
3453	4822 051 20153	15KΩ00 5% 0,1W
3454	4822 051 20153	15KΩ00 5% 0,1W
3455	4822 051 20103	10KΩ00 5% 0,1W
3467*	4822 051 20102	1KΩ00 5% 0,1W
3468*	4822 051 20102	1KΩ00 5% 0,1W
3469*	4822 051 20472	4KΩ70 5% 0,1W
3470	4822 051 20153	15KΩ 5% 0805
3471	4822 051 20103	10KΩ00 5% 0,1W
3472*	4822 051 20153	15KΩ00 5% 0,1W
3473	4822 051 20153	15KΩ00 5% 0,1W
3474*	4822 051 20472	4KΩ70 5% 0,1W
3475*	4822 051 20102	1KΩ00 5% 0,1W
3476	4822 051 20103	10KΩ00 5% 0,1W
3477	4822 051 20153	15KΩ00 5% 0,1W
3478	4822 051 20153	15KΩ00 5% 0,1W
3479	4822 051 20153	15KΩ00 5% 0,1W
3480	4822 051 20103	10KΩ00 5% 0,1W
3481	4822 051 20103	10KΩ00 5% 0,1W
3482	4822 051 20103	10KΩ00 5% 0,1W
3483*	4822 051 20102	1KΩ00 5% 0,1W
3484	4822 051 20153	15KΩ00 5% 0,1W
3485	4822 051 20153	15KΩ00 5% 0,1W
3486	4822 051 20103	10KΩ00 5% 0,1W
3487	4822 051 20153	15KΩ00 5% 0,1W
3488	4822 051 20103	10KΩ00 5% 0,1W
3489	4822 051 20103	10KΩ00 5% 0,1W
3490	4822 051 20103	10KΩ00 5% 0,1W
3491#	4822 051 10008	CHIP JUMPER
3492	4822 051 20153	15KΩ00 5% 0,1W
3493	4822 051 20153	15KΩ00 5% 0,1W
3494	4822 051 20103	10KΩ00 5% 0,1W
3495	4822 051 20153	15KΩ00 5% 0,1W
3496	4822 051 20153	15KΩ00 5% 0,1W
3497	4822 051 20153	15KΩ00 5% 0,1W
3498	4822 051 20102	1KΩ00 5% 0,1W
3499	4822 051 20103	10KΩ00 5% 0,1W
3500	4822 051 20103	10KΩ00 5% 0,1W
3501	4822 051 20103	10KΩ00 5% 0,1W
3502	4822 051 20103	10KΩ00 5% 0,1W
3503	4822 051 20103	10KΩ00 5% 0,1W
3504	4822 051 20103	10KΩ00 5% 0,1W
3505	4822 051 20104	100KΩ00 5% 0,1W
3506	4822 051 20683	68KΩ00 5% 0,1W
3507	4822 051 20223	22KΩ00 5% 0,1W
3508	4822 051 20334	330KΩ00 5% 0,1W
3509	4822 051 20153	15KΩ00 5% 0,1W
3510	4822 051 20153	15KΩ00 5% 0,1W
3513	4822 051 20153	15KΩ00 5% 0,1W
3517	4822 051 20153	15KΩ00 5% 0,1W
3518	4822 051 20153	15KΩ00 5% 0,1W
3521	4822 051 20681	680Ω 5% 0,1W
3522	4822 051 20104	100KΩ 5% 0,1W

3523	4822 051 20103	10KΩ 5% 0,1W
3524	4822 051 20103	10KΩ00 5% 0,1W
3525	4822 051 20151	150Ω 5% 0,1W
3527	4822 051 20681	680Ω 5% 0,1W
3528	4822 051 20151	150Ω 5% 0,1W
3530	4822 051 20103	10KΩ00 5% 0,1W
3531	4822 051 20103	10KΩ00 5% 0,1W
3532	4822 051 20153	15KΩ00 5% 0,1W
3533	4822 051 20153	15KΩ00 5% 0,1W
3534	4822 051 20153	15KΩ00 5% 0,1W
3535	4822 116 40221	POSIST PTH60G31AR8Ω2
3536	4822 116 40221	POSIST PTH60G31AR8Ω2
3540	4822 051 20153	15KΩ00 5% 0,1W
3541	4822 051 20153	15KΩ00 5% 0,1W
3542	4822 051 20102	1KΩ00 5% 0,1W
3543	4822 051 20102	1KΩ00 5% 0,1W
3544	4822 051 10008	CHIP JUMPER
3545	4822 051 10008	0Ω00 5% 0,25W
3546	4822 051 10008	0Ω00 5% 0,25W
3550	4822 051 20104	100KΩ 5% 0805
3551	4822 051 20104	100KΩ 5% 0805
3552	4822 051 20104	100KΩ 5% 0805
3553	4822 051 20104	100KΩ 5% 0805
3554	4822 051 20104	100KΩ 5% 0805
3555	4822 051 20104	100KΩ 5% 0805
3556	4822 051 20104	100KΩ 5% 0805
3557	4822 051 20104	100KΩ 5% 0805
3558	4822 051 20104	100KΩ 5% 0805
3559	4822 051 20104	100KΩ 5% 0805
3560	4822 051 20472	4KΩ70 5% 0,1W
3561	4822 051 20151	150Ω 5% 0805
3562	4822 051 20472	4KΩ70 5% 0,1W
3563	4822 051 20105	1M 5% 0805
3564	4822 051 20105	1M 5% 0805
3565	4822 051 20105	1M 5% 0805
3566	4822 051 20105	1M 5% 0805
3567	4822 051 20105	1M 5% 0805
3569	4822 051 20105	1M 5% 0805
3570	4822 051 20105	1M 5% 0805
3571	4822 051 20105	1M 5% 0805
3572	4822 051 20105	1M 5% 0805
3573	4822 051 20105	1M 5% 0805
3574	4822 051 20151	150Ω 5% 0805
3575	4822 051 20103	10KΩ 5% 0,1W
3576	4822 051 20333	33KΩ 5% 0,1W
3651	4822 051 20103	10KΩ 5% 0805
3652	4822 116 52215	220E 5% 0,5W
3653	4822 116 52215	220E 5% 0,5W
3654	4822 116 52215	220E 5% 0,5W
3655	4822 050 24701	470Ω 1% 0,6W
3656	4822 116 52215	220E 5% 0,5W
3657	4822 116 52215	220E 5% 0,5W
3658	4822 116 52215	220E 5% 0,5W
3659	4822 050 23301	330Ω 1% 0,6W
3660	4822 050 24701	470Ω 1% 0,6W
3661	4822 050 15601	560Ω 1% 0,4W
3663	4822 050 21502	1KΩ50 1% 0,6W
3664	4822 050 24701	470Ω 5% R25J
3665	4822 116 52215	220Ω 5% 0,5W
3666	4822 116 52215	220Ω 5% 0,5W

22DC962/62B 22DC982/62B

3667	4822 116 52252	180KΩ 5% 0,5W
3668	4822 053 11109	10Ω 5% 2W
3670	4822 051 20222	2KΩ20 5% 0,1W
3671	4822 051 20103	10KΩ00 5% 0,1W
3672	4822 051 20104	100KΩ00 5% 0,1W
3673	4822 116 40219	PTH59F04BH471TS
3674	4822 050 24703	47KΩ 5% R25J
3676	4822 116 40221	8Ω2 20%
3677	4822 116 52234	100KΩ 5% R25J
3679	4822 116 52271	33KΩ 5% 0,5W
3680	4822 051 20103	10KΩ00 5% 0,1W
3681	4822 051 20104	100KΩ 5% 0805
3750	4822 051 20104	100KΩ 5% 0,1W
3751	4822 051 20104	100KΩ00 5% 0,1W
3752	4822 051 20104	100KΩ00 5% 0,1W
3753*	4822 051 20153	15KΩ00 5% 0,1W
3754	4822 051 20153	15KΩ00 5% 0,1W
3756	4822 051 20562	5,6KΩ 5% 0,1W
3757	4822 051 20393	39KΩ 5% 0,1W
3758	4822 051 20393	39KΩ 5% 0,1W
3759	4822 051 20103	10KΩ 5% 0805
3760	4822 051 20103	10KΩ 5% 0805
3761	4822 051 20332	3,3KΩ 5% 0,1W
3762	4822 116 52186	22Ω 5% R25J

5050	4822 152 20677	10µH 10%
5051	4822 152 20677	10µH 10%
5052	4822 157 52007	4.7µH 10%
5053	4822 152 20678	33µH
5054	4822 157 50975	1 MH
5055	4822 152 20682	6.15µH 6%
5056	4822 152 20678	33µH
5057	4822 152 20683	28µH 2.52MHz
5058	4822 152 20679	68µH 10%
5070	4822 242 72076	10T77BB(10,7MHZ)
5071	4822 242 72076	10T77BB(10,7MHZ)
5072	4822 242 71883	SFE10,7MS318-D
5073	4822 242 71883	SFE10,7MS318-D
5100	4822 242 80258	SFE10.7MS2A-TF20
5150	4822 156 11081	1,47µH 10,7MHZ
5160	4822 157 51503	560µH10%
5161	4822 157 50975	1 MH
5170	4822 242 71874	4,000 000 MC
5450	4822 242 72527	CST4,00MGW-TF01
5451	4822 242 72527	CST4,00MGW-TF01
5452	4822 242 80259	LN-G8-311(TPR11)
5453	4822 242 80259	LN-G8-311(TPR11)
5454	4822 242 72527	CST4,00MGW-TF01
5751	4822 157 50975	1000µH 10%
5755	4822 157 53669	COIL FILTER CU15B2

6012	5322 130 31928	BAS16
6013	5322 130 31928	BAS16
6014	5322 130 41983	BC858B
6015	5322 130 80214	BAS28
6016	5322 130 31937	BZX84B-4V7
6017	5322 130 41982	BC848B

6051	4822 130 82596	BB419
6100	5322 130 31928	BAS16
6200	5322 130 31928	BAS16
6201	5322 130 31928	BAS16
6350	5322 130 31928	BAS16
6351	5322 130 31928	BAS16
6450	5322 130 31937	BZX84-C4V7
6452	5322 130 31928	BAS16
6454	4822 130 80968	RD4.7JSB1
6457	5322 130 31928	BAS16
6458	5322 130 31928	BAS16
6750	5322 130 30684	1N4002
6751	5322 130 30684	1N4002
6752	5322 130 31928	BAS16
6754	5322 130 30684	1N4002
6755	4822 130 82595	TLHO4400AS12Z
6755	5322 130 30684	1N4002
6756	4822 130 82595	TLHO4400AS12Z
6756	5322 130 34459	1N5059
6757	4822 130 82595	TLHO4400AS12Z
6758	4822 130 82595	TLHO4400AS12Z
6759	4822 130 82595	TLHO4400AS12Z
6760	4822 130 82595	TLHO4400AS12Z
6761	4822 130 82595	TLHO4400AS12Z
6762	4822 130 82595	TLHO4400AS12Z
6763	4822 130 82595	TLHO4400AS12Z
6764	4822 130 82595	TLHO4400AS12Z
6765	4822 130 82595	TLHO4400AS12Z
6766	4822 130 82595	TLHO4400AS12Z
6767	4822 130 82604	TLPO 5600
6768	4822 130 82604	TLPO 5600
6769	4822 130 82595	TLHO4400AS12Z
6770	4822 130 82595	TLHO4400AS12Z
6771	4822 130 82595	TLHO4400AS12Z
6772	4822 130 82595	TLHO4400AS12Z
6773	4822 130 82595	TLHO4400AS12Z
6774	4822 130 82595	TLHO4400AS12Z
6775	4822 130 82595	TLHO4400AS12Z
6776	4822 130 82595	TLHO4400AS12Z
6777	4822 130 82595	TLHO4400AS12Z
6778	4822 130 82595	TLHO4400AS12Z
6779	4822 130 82595	TLHO4400AS12Z
6780	4822 130 82595	TLHO4400AS12Z
6781	4822 130 82595	TLHO4400AS12Z
6782	4822 130 82595	TLHO4400AS12Z
6783*	4822 130 82595	TLHO4400AS12Z
6784*	4822 130 82595	TLHO4400AS12Z
6785	4822 130 82595	TLHO4400AS12Z
6786	4822 130 82595	TLHO4400AS12Z
6787	4822 130 82465	1.5KE27P
6787	4822 130 82595	TLHO4400AS12Z
6788	4822 130 82595	TLHO4400AS12Z
6788	4822 252 60125	SURGE PROTECTOR

7050	4822 209 72247	TEA6200/V2
7150	4822 209 73507	TEA6100/N3
7151	4822 209 61954	TSA6057/C7
7200	5322 130 41983	BC858B
7201	5322 130 41983	BC858B

22DC962/62B 22DC982/62B

7203	4822 130 60511	BC847B
7350	4822 209 63906	SA571N
7351#	4822 130 60511	BC847B
7352#	4822 130 60511	BC847B
7450	4822 900 10369	CONTROL
7451	4822 900 10365	MAIN RADIO
7452	4822 900 10271	MAIN
7453	4822 900 10267	SEC CODE
7454	4822 900 10364	INTERFACE
7455	4822 209 31138	PCF80C51BH-3P/J306
7456	4822 209 83159	LA2000
7457	4822 900 10265	RDS MEMORY
7458	4822 900 10372	COMMUNUCATION
7459#	4822 130 60511	BC847B
7460#	5322 130 41982	BC848B
7461	5322 130 41983	BC858B
7462	5322 130 41983	BC858B
7462	5322 209 11578	PCF8574T
7463	5322 130 41983	BC858B
7464	5322 209 11129	PCF8576T PHIN
7483	5322 209 11578	PCF8574T
7484	5322 209 11578	PCF8574T
7485	5322 209 11578	PCF8574T
7550	4822 209 73396	LA3600
7551	4822 209 73396	LA3600
7552	4822 209 72892	TEA6310T/V5
7553	5322 209 11102	SM IC HEF4052BT
7554	4822 209 30708	LC7523
7650	4822 209 31328	IC FL26263 (TDA7374V
7651	4822 209 31328	IC FL26263 (TDA7374V
7652	4822 130 40854	BC327
7652	5322 209 14542	HEF4066BT
7654	5322 130 41982	BC848B
7655	5322 130 44864	BC517
7656	5322 130 41982	BC848B
7657	5322 130 41982	BC848B
7658	5322 130 44864	BC517
7660	5322 130 44864	BC517
7661	5322 130 41982	BC848B
7662	5322 130 41982	BC848B
7663	4822 130 63256	SM FET MTP2955LF
7751	5322 130 41982	BC848B
7752	5322 130 41983	BC858B
7753	4822 130 62651	ON4414
7754	4822 209 30016	L4901A
7755	4822 209 72227	L4916
7756	4822 209 63938	L4918
7757	5322 130 61677	BC875

* = ONLY 22DC982/62B
# = ONLY 22DC962/62B

22DC962/62B 22DC982/62B

Car Cassette Deck SCA

Version 2.2
Version 2.5

Service
Service
Service

Service Manual

12 V

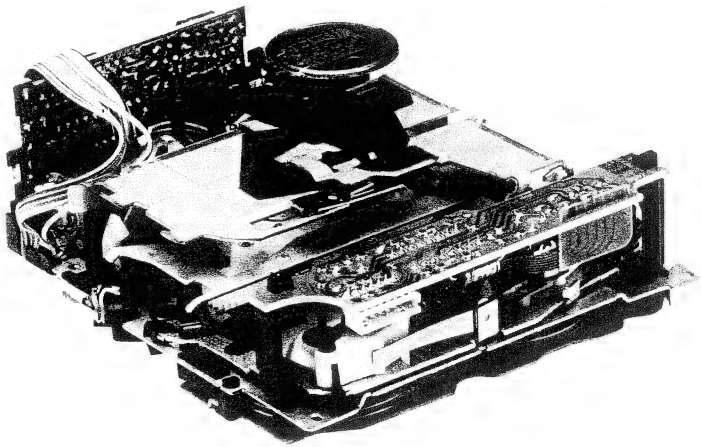

Published by Philips Car Stereo Printed in The Netherlands ©Copyright reserved Subject to modification

4822 725 23505

PCS 64595

Table of contents

	page
deck description	3
specification	4
repair instructions	5
pcb	6
figure 1, figure 2	7
figure 3 till figure 5	8
figure 6, figure 7	9
figure 8 till figure 10	10
measurments	11
measurments	12
circuit diagram	13
exploded view	14
partslist	15

DECK - DESCRIPTION

The SCA - versions 2.2 and 2.5 are full logic servo controlled Autoreverse Tapedecks, containing the mechanism, servo- and capstan motor, preamplifier (Audio - PCB) and microprocessor controlled electronics. The following features are available:

FEATURES:

PLAYBACK HEAD:	Dolby head with Philips AZIMUTH guiding. Fix mounting, no screws, no alignment necessary.
CASSETTE INSERTION:	The cassette is inserted until one feels klick and conterforce
CASSETTE LOADING:	After a manual insertion distance of about 6 mm the cassette moves motor controlled to the play position.
TAPE TIGHTENING:	Before a new loaded cassette starts play or before a cassette is ejected the tape transport mechanism will tighten the tape.
TAPE SALAD PROTECTION:	The tape transport is continuously controlled by microcomputer via servo motor. If there is irregular tapetransport, the mechanism will change the play-direction and correct the tapetransport. If there is no correction possible, it tries it again up to maximum 6 times. Then the cassette will be ejected.
TAPE TENSION:	Nearly constant during play (from beginning until end of tape) due to a constant tape force realized by the servo motor.
EJECT:	After the eject command is activated, the cassette is carried back via a servo motor controlled system to the defined controlled loading position (for SCA 2.2 current consumtion will be reduced).
TAPE END:	Automatic reversion at tape end. The servo motor changes direction of rotation and therefore the opposite pinch roller and the driving wheel transports the tape quickly (< 0.8 sec) in the other direction (no movement of headplate).
MANUAL REVERSE:	If the reverse command is activated, the deck changes to the opposite play direction. (< 0.8 sec) Same function as tape end.
AUTOMATIC TAPE SELECTION:	Ferro, Metal and Chromium tape will be automatically detected. The " ME/FE " for switching preamplifier equalization has the level: high - Metal or Chromium tape low - Ferro tape. The state command will be sent to the bus interface too.
MUSIC SEARCH SYSTEM:	If the MSS-function is activated, the head and pinchroller go back into the wind position. Tape transport is fast and the head detects modulation of the tape. If a modulation pause > 3 sec is tape transport remains fast at the next modulation start.
PEOGRAMMABLE MSS VIA MSS CONTOL:	Depending on the number of times the MSS-command is sent, n songs be skipped and the next played (n times = n songs skipped). Tape end deletes this function.

FFW - FRW FUNCTION:	FFW = wind in previous play direction FRW = wind in opposite play direction If the FFW/FRW command is activated, the head plate falls back in the wind position. Servo motor speed is increased.
STAND BY:	a) power off stand by If the power supply is switched off, head and pinch roller are completely lifted from the tape. (No current is supplied.) b) manual stand by If the stand by command is activated, the deck is switched off (motor stopped), the head and pinch rollers are completely lifted from tape.

1. MECHANICAL SPECIFICATION

Operating positions:	Any position from horizontal -30° to standing vertically on the rear side.
Tape speed:	4,76 cm/sec
Wow and flutter:	< 0,3% unweighted
Winding time test tape: RCA 118	< 120 sec
Eject time:	< 1.6 sec

2. ELECTRICAL SPECIFICATION

Voltage	min 10.0 V max 16.0 V
current - playback	220 mA
current - fast wind	100 - 150 mA
current - eject, standby	SCA 2.2: 50 µA SCA 2.5: 12 mA
Hold in voltage	8.0 V
Capstan motor	14,4 V DC
Servo motor	2 V DC Play 11,5 V DC Fast, servo
PLAYBACK CROSSTALK ch. 1 - 2 / 3 - 4 ch. 2 - 3	 35 - 40 dB 45 - 50 dB

REPAIRINSTRUCTIONS

Protect the tape-decks against ESD.

For demounting see figures 1 to 7.

Plastic catches and snap connections must be released careful with a screwdriver or tweezers.

Disks (Pos.60) must be renewed after demounting.

Before taking out the cassette carrier, put the right leg of the eject spring (Pos.503) into the mounting position, otherwise it will hit against the guidance and breaks it (see figure 8).

Check that segments (Pos.66) and bracket (Pos.71) are fitted in the correct position. Then unlock the segments (see figure 6).

After fitting switch lever (Pos.72) the leaf spring must be pressed over the black lug of the chassis (see figure 7).

For lubrication see indications in the exploded view.

To clean tape transport and head only use wet cleaning tapes.

Tools required:

test cassette SBC 420	(4822 397 30071)
test cassette SBC 419	(4822 397 30069)
friction test cassette	(4822 395 30054)
puller for clutch (fig.2)	(4822 395 60039)
wow & flutter meter	

ADJUSTMENTS

Frictions:
Adjust potentiometer Pos.3415 until friction-test-cassette shows 6,5 Nmm to 9,5 Nmm in NOR-direction (after 2 minutes), and 7 Nmm in REV-direction.
The supplying reel drag must be 0,3 Nmm to 0,7 Nmm.
If values deviates, check lubrication and carrier-spindle (Pos.62).

Wow and flutter, tape speed:
Connect wow and flutter meter to loudspeaker outputs and play the 3150 Hz signal track of test cassette SBC 420. Value should be max. 0,3 %. Tape speed can be adjusted with motor potentiometer A.
Use a screwdriver with an insulated shaft (see figure 8)!
If the value of wow and flutter is not correct, check motors (Pos.1002, 1003), pressure rollers (Pos.68, 70), flywheels (Pos.77), belt (Pos.79), pulley (Pos.76) and spring torwartstraction (Pos.65).
Check also the distance between bracket of pressure roller NOR-side and the adjustable excenter when the deck plays in NOR-direction (see figure 10).

Output level:
Play track 400 Hz - 200 nWb/m of testcassette SBC 419.
For left channel measure at pin 1 of connector 0002, align potentiometer (Pos.3704).
For right channel measure at pin 3 of connector 0002, align potentiometer (Pos.3724).
SCA 2.2: 38,8 mV +/- 1 dB
SCA 2.5: 52,0 mV +/- 1 dB

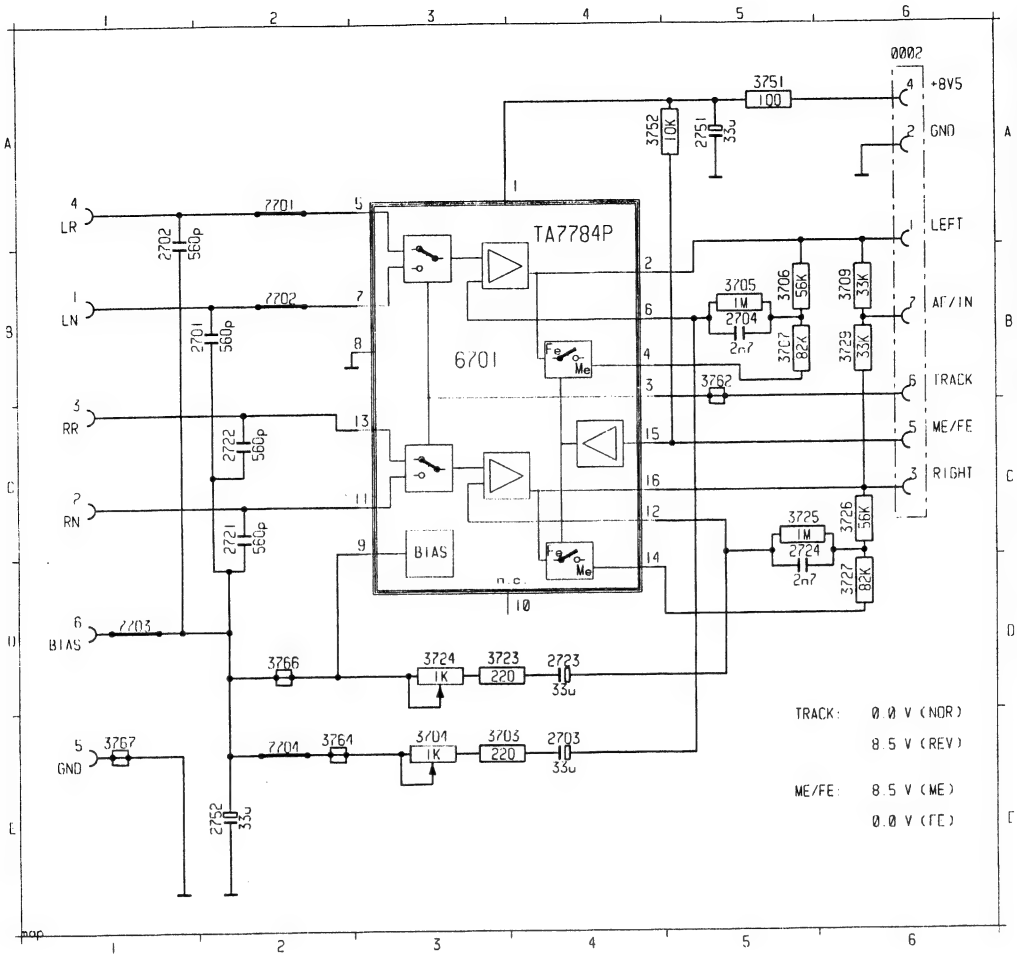

0002 A 1	2704 A 2	2724 A 2	3704 A 1	3709 A 1	3726 A 1	3752 A 1	3767 A 2	7703 A 3
2701 A 3	2721 A 3	2751 A 1	3705 A 2	3723 A 2	3727 A 2	3762 A 1	6701 A 1	7704 A 2
2702 A 3	2722 A 3	2752 A 3	3706 A 2	3724 A 2	3729 A 1	3764 A 2	7701 A 3	
2703 A 1	2723 A 2	3703 A 1	3707 A 2	3725 A 2	3751 A 1	3766 A 3	7702 A 2	

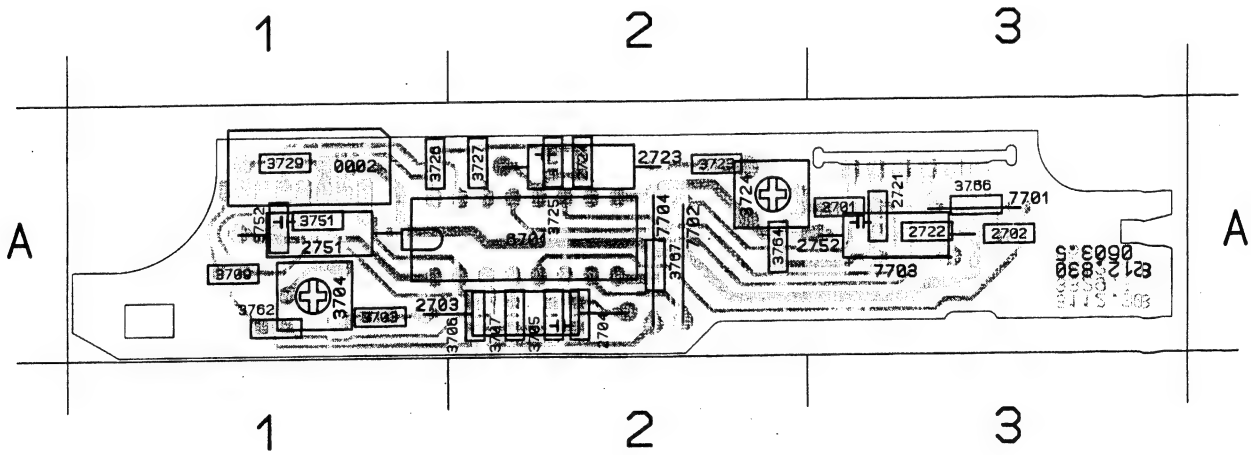

EJECTOR 61, HOLDER 63, LIFT 64

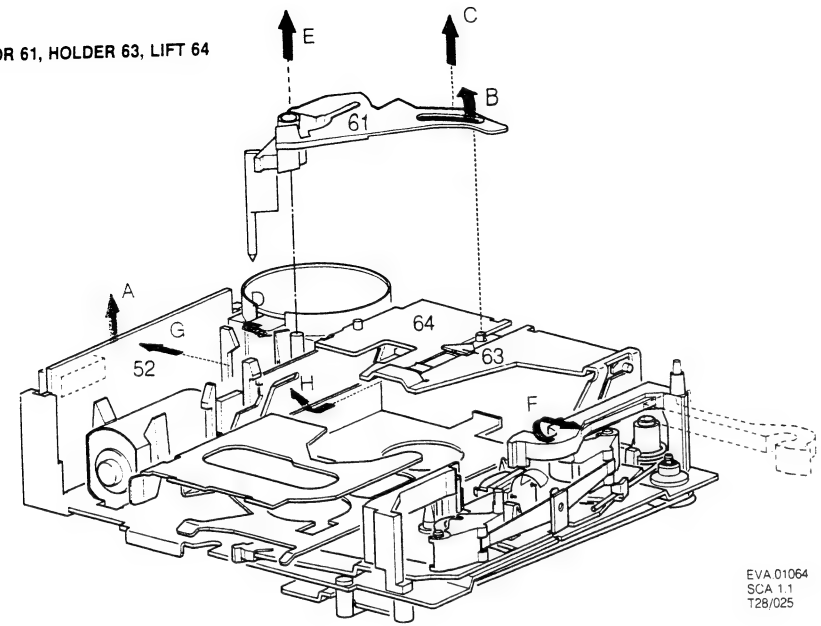

Fig. 1

CLUTCH 51, SWITCH 53, GEAR WHEEL 58, CARRIER 62

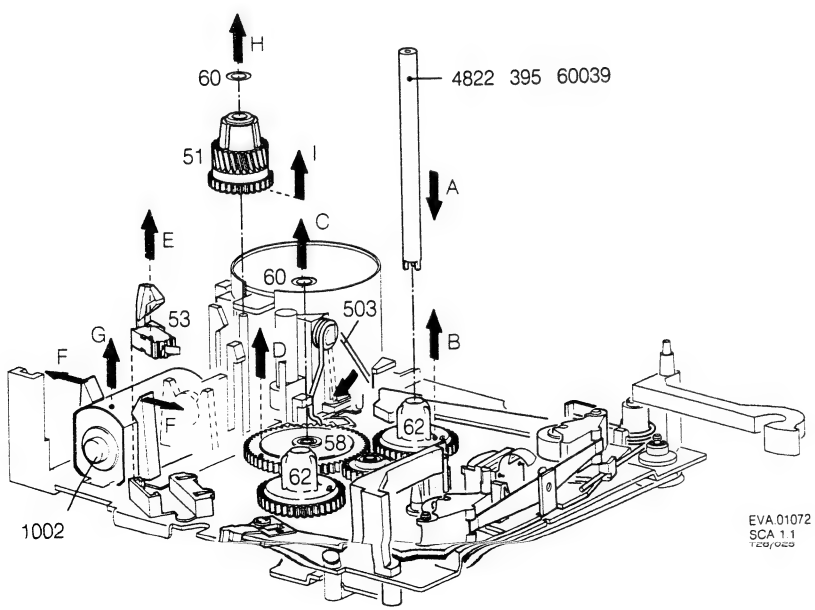

Fig. 2

PRESSURE ROLLER 68, HEAD BRACKET 73, HEAD 1004

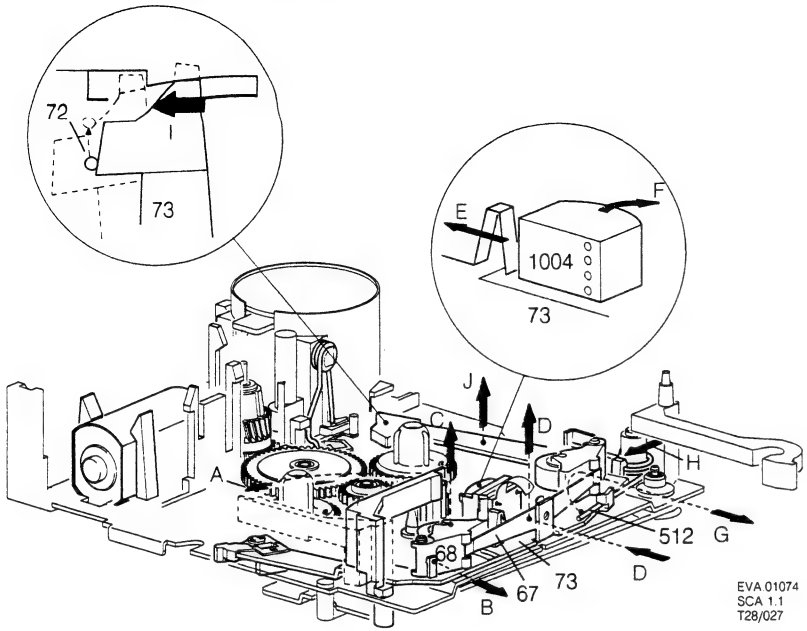

Fig. 3

ANCHOR 56/78, RELAY 1001

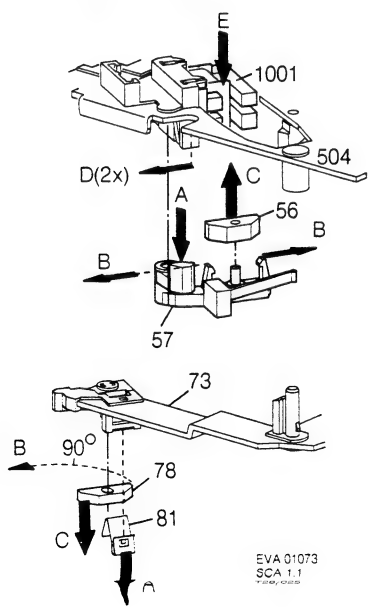

Fig. 4

FLYWHEEL 77, BELT 79

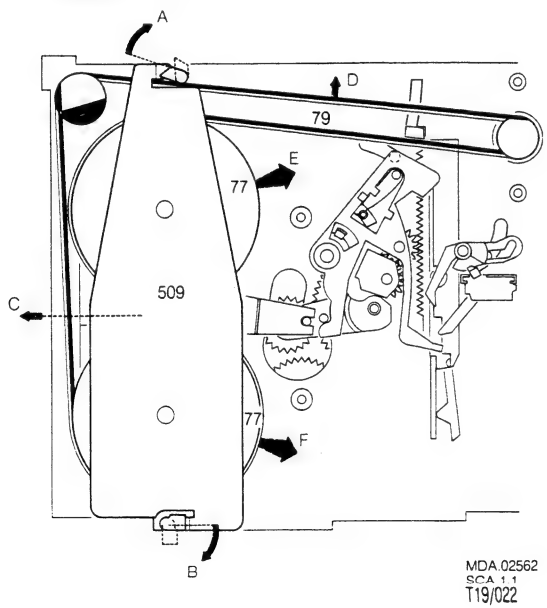

Fig. 5

SEGMENT 66, BRACKET 71, BEARING 74

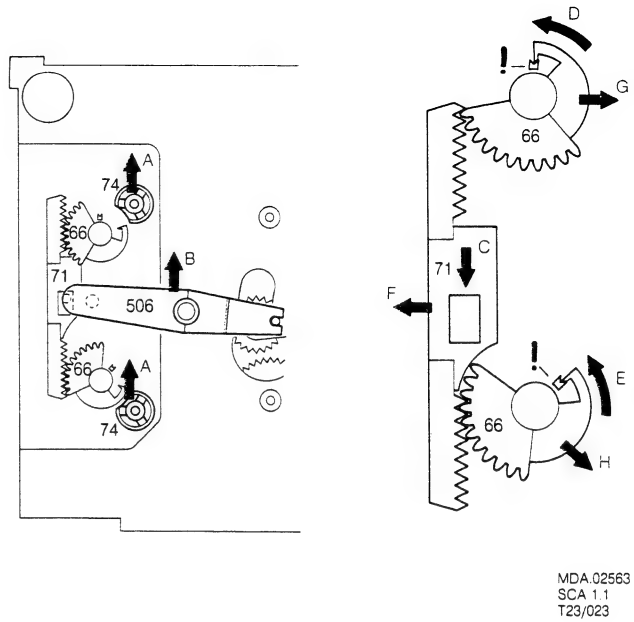

Fig. 6

SWITCH 54, SWIVEL GEAR 69, LEVER 72

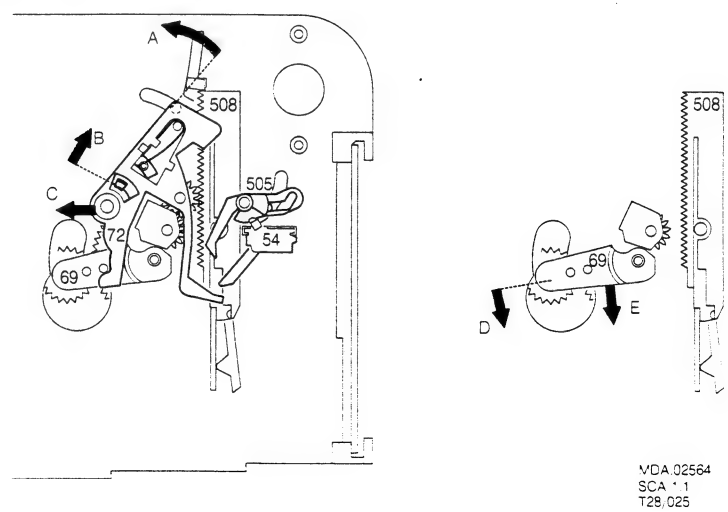

Fig. 7

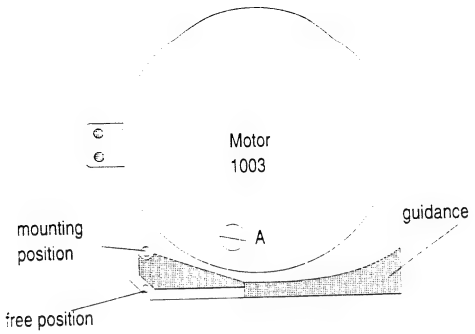

figure 8

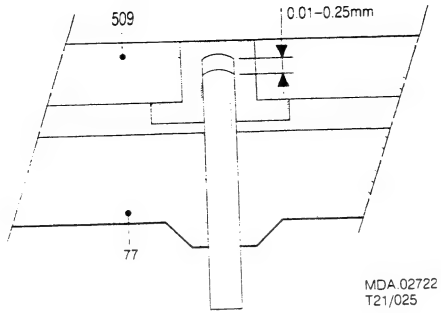

Fig. 9

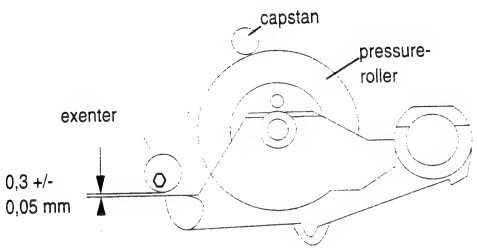

figure10

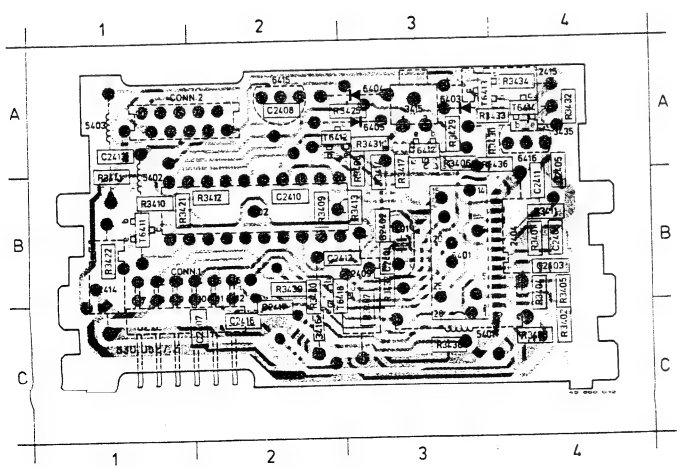

1401	B3	R3408	A3
2404	B4	R3409	B2
2409	B3	R3410	B1
2414	B1	R3411	B4
2415	A4	R3412	B4
3415	A3	R3413	B3
3416	C2	R3414	B3
3435	A4	R3417	B3
5401	C3	R3421	B3
5402	B1	R3422	B1
5403	A1	R3425	A3
6401	B3	R3429	A3
6402	B2	R3430	A4
6403	A3	R3431	A3
6404	A3	R3432	A4
6405	A3	R3433	A4
6415	A2	R3434	A4
6416	A4	R3436	A4
C2401	B3	R3437	B3
C2402	B3	R3438	C3
C2403	B4	R3439	B2
C2405	B3	R3440	B2
C2406	B4	R3441	B1
C2407	C2	T6411	B1
C2408	A2	T6412	A2
C2410	B2	T6413	A3
C2411	B4	T6414	A4
C2412	B2	T6417	A3
C2413	A1	T6418	B2
C2416	C2		
C2417	C2		
R3401	B4		
R3402	C4		
R3403	C4		
R3404	B4		
R3405	B4		
R3406	A3		
R3407	C3		

PCS 64604

PCS 64605

	special for version 2.5	equal for both versions	special for version 2.2
		Pos. 6401 S6D3	
1:		3,7 / 0,1 (P)	
2:		5,0	
3:		5,0	
4:		5,0	
5:		5,0	
6:		2,5	
7:		2,50,0 (Sb)	
8:		2,50,0 (Sb)	
9:	0,0 (Sb)	0,1 (P) / 0,7 (W)	1,2 (Sb)
10:		5,0	
11:		GND	
12:	0,0 / 5,0 (W)		4,7 / 0,0 (Sb)
13:	5,0	0,0 (Sb)	4,7
14:	5,0 (P)	0,0	4,7 (P)
15:		5,0 (N) / 0,0 (R)	
16:		0,0 (N) / 5,0 (R)	
17:		5,0 (P) / 0,2 (W)	
18:		0,0 (N) / 5,0 (R)	
19:		2,5	5,0 (Sb)
20:		5,0	
21:		2,5	5,0 V (Sb)
22:		4 MHz	
23:	5,0		0,0
24:	0,0	5,0	(Sb)0,1
25:		n.c.	
26:		0,1	0,0 (Sb)
27:		0,0 (FE) / 5,0 (ME)	
28:		0,0 / 5,0 (Sb)	
		Pos. 6402 SCA 5058	
1:		0,0	
2:		n.c.	
3:	0,0 (Sb)	0,1 (P) / 0,7 (W)	1,2 (Sb)
4:		n.c.	
5:		GND	
6:		GND	
7:		n.c.	
8:		0,0 (P) / 3,5 (W)	
9:		3,5 (PN) / 1,3 (PR) / 10,6 (WN) / 1,0 (WR)	
10:		0,5 (P) / 0,25 (W)	
11:		12,0	
12:		1,3 (PN) / 3,5 (PR) / 1,0 (WN) / 10,6 (WR)	
13:	2,3 (Sb)	3,5	0,0 (Sb)
14:		2,3	0,0 (Sb)
15:		GND	
16:		GND	
17:		0,8 / 0,0 (Sb)	
18:		5,0 (N) / 0,0 (R)	
19:		0,0 (N) / 5,0 (R)	
20:		0,8 / 0,0 (Sb)	

	special for version 2.5	equal for both versions	special for version 2.2
		Pos. 6411 BC847	
B:		0,65 (P) / 0,2 (W) / 0,0 (Sb)	
C:	2,3 (Sb)	0,0 (P) / 3,5 (W)	0,0 (Sb)
E:		GND	
		Pos. 6412 BC847	
B:		0,8 / 0,0 (Sb)	
C:		0,1 / 12,0 (Sb)	
E:		GND	
		Pos. 6413 BC847	
B:	0,0 / 0,7 (W)		0,8 / 0,0 (Sb)
C:	12,0 / 0,0 (W)		0,1 / 12,0 (Sb)
E:		GND	
		Pos. 6415 BC875	
B:		0,0 / 1,5 (P)	
C:		11,0 / 0,8 (P)	
E:		GND	
		Pos. 6416	
	BC857		**BC638**
B:	12,0		11,2 / 12,0 (Sb)
C:	0,0 / 12,0 (W)		12,0 / 0,0 (Sb)
E:		12,0	
		Pos. 6417 BC847	
B:		0,1	
C:		0,8 / 0,0 (Sb)	
E:		GND	

All values in Volt-DC, measured against GND

(P) = Play mode (both directions)
(W) = Wind mode (both directions)
(N) = Normal mode
(R) = Reverse mode
(PN) = Play normal direction
(PR) = Play reverse direction
(WN) = Wind normal direction
(WR) = Wind reverse direction
(Sb) = Standby
(FE) = Ferro - cassette
(ME) = Metal-/Chrome - cassette
n.c. = not connected

PCS 64606

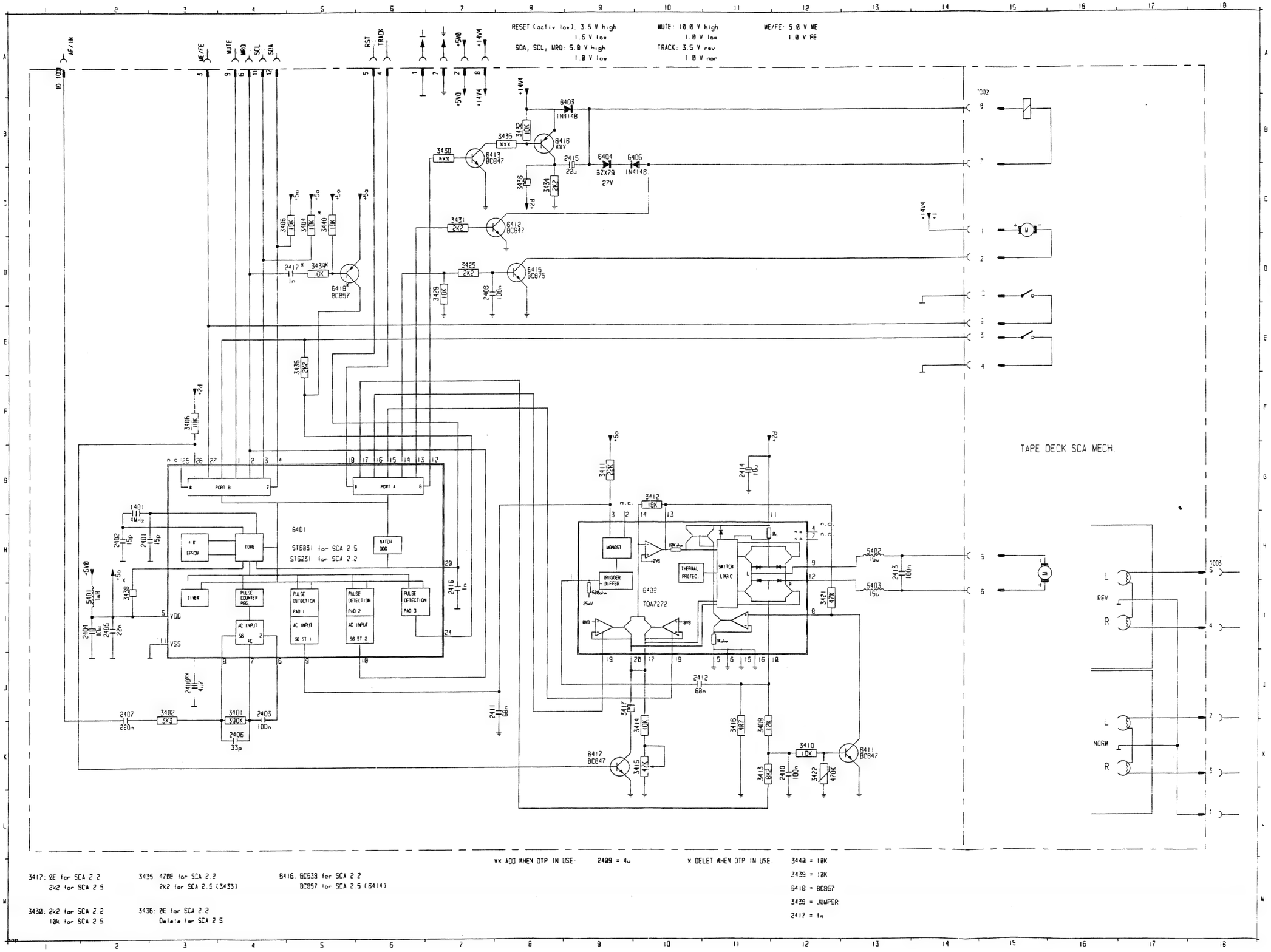

** ADD WHEN OTP IN USE: 2409 = 4u

* DELET WHEN OTP IN USE.

3440 = 10K
3439 = 10K
6418 = BC857
3429 = JUMPER
2417 = 1n

3417: 0E for SCA 2.2
2k2 for SCA 2.5

3435 470E for SCA 2.2
2k2 for SCA 2.5 (3433)

6416: BC538 for SCA 2.2
BC857 for SCA 2.5 (6414)

3430: 2k2 for SCA 2.2
10k for SCA 2.5

3436: 0E for SCA 2.2
Delete for SCA 2.5

A	4822 390 10107	ISOFLEX PDP65
B	4822 390 20128	TOPAS L30
C	4822 390 20116	004
E	4822 390 20027	MOLYKOTE DX
51	4822 522 10435	
52	4822 214 51815	SCA 2.2
52	4822 214 52005	SCA 2.5
53	4822 277 11216	
54	4822 277 11215	
55	4822 502 12548	
56	4822 404 21084	
57	4822 404 21087	
58	4822 522 32868	
59	4822 522 32871	
60	4822 532 52348	
61	4822 404 21091	
62	4822 528 10776	
63	4822 404 21092	
64	4822 466 82631	
65	4822 492 70926	
66	4822 522 32869	
67	4822 492 70557	
68	4822 528 81377	
69	4822 528 70658	
70	4822 528 81449	
71	4822 404 21089	
72	4822 404 21086	
73	4822 404 21088	
74	4822 520 30539	
76	4822 528 81144	
77	4822 528 81378	
78	4822 404 21083	
79	4822 358 31053	
81	4822 492 70556	
85	4822 214 52006	
	4822 701 12892	Deck compl. SCA 2.2
	4822 701 12893	Deck compl. SCA 2.5

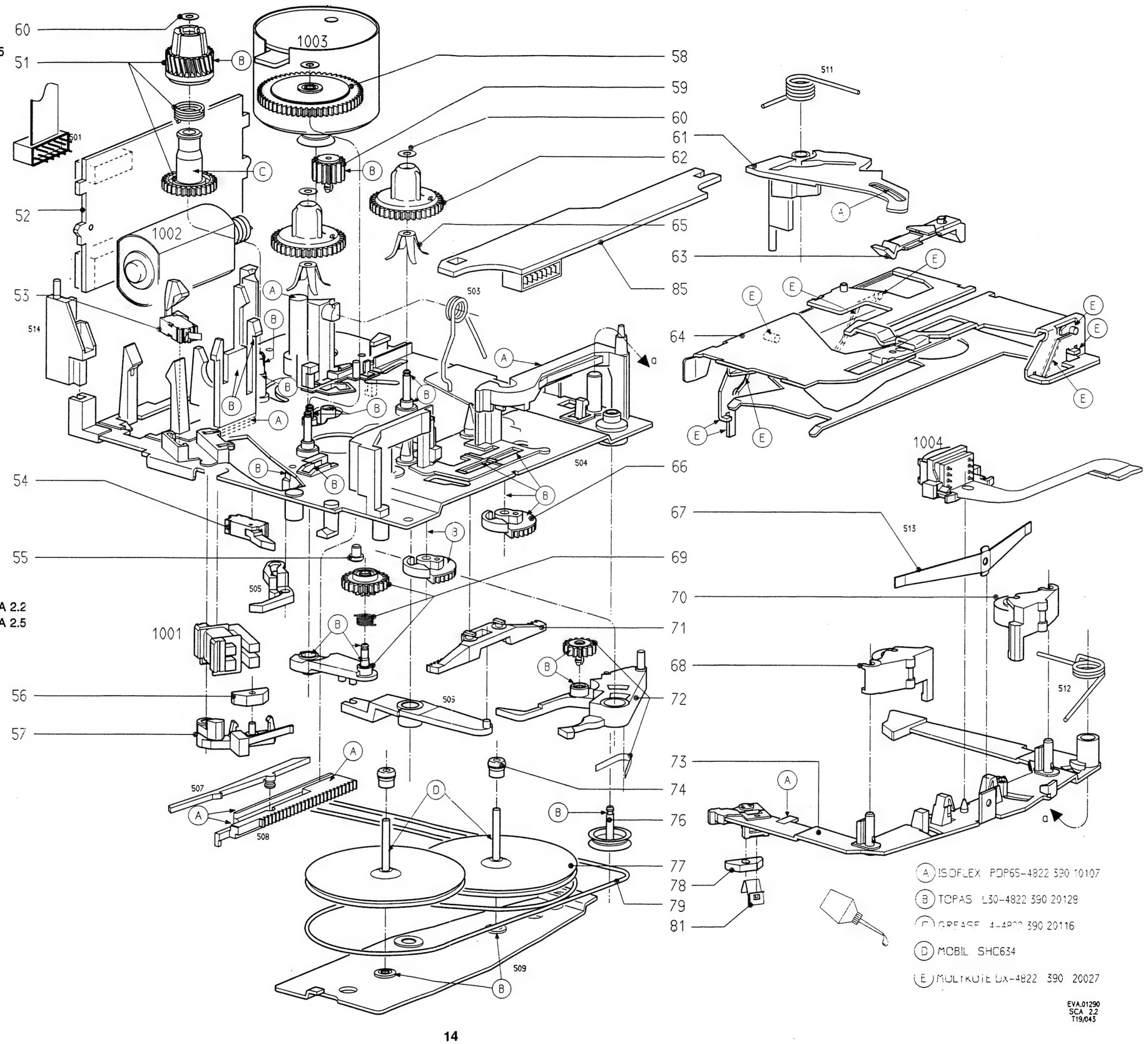

Capacitor

2401	5322 122 33869	15pF	5%	63V
2402	5322 122 33869	15pF	5%	63V
2403	4822 122 33496	100nF	10%	63V
2404	4822 124 20697	10μF	50%	25V
2405	5322 122 32654	22nF	10%	63V
2406	5322 122 32659	33pF	5%	50V
2407	4822 122 32916	220nF	10%	63V
2408	4822 122 33496	100nF	10%	63V
2410	4822 122 33496	100nF	10%	63V
2411	4822 122 32891	68nF	10%	63V
2412	4822 122 32891	68nF	10%	63V
2413	4822 122 33496	100nF	10%	63V
2414	4822 124 20697	10μF	50%	25V
2415	4822 124 20698	22μF	50%	25V
2416	4822 122 33178	1nF	20%	50V
2701	4822 122 33173	560pF	10%	50V
2702	4822 122 33173	560pF	10%	50V
2703	4822 124 20688	33μF	50%	16V
2704	4822 122 33176	2.7nF	20%	50V
2721	4822 122 33173	560pF	10%	50V
2722	4822 122 33173	560pF	10%	50V
2723	4822 124 20688	33μF	50%	16V
2724	4822 122 33176	2.7nF	20%	50V
2751	4822 124 20688	33μF	50%	16V
2752	4822 124 20688	33μF	50%	16V

Resistor

3401	4822 051 20394	390k	5%	0.1W
3402	4822 051 20332	3k3	5%	0.1W
3403	4822 051 20103	10k	5%	0.1W
3404	4822 051 20103	10k	5%	0.1W
3405	4822 051 20103	10k	5%	0.1W
3406	4822 051 20103	10k	5%	0.1W
3409	4822 051 20123	12k	5%	0.1W
3410	4822 051 20103	10k	5%	0.1W
3411	4822 051 20223	22k	5%	0.1W
3412	4822 051 20183	18k	5%	0.1W
3413	4822 051 20822	8k2	5%	0.1W
3414	4822 051 20272	2k7	5%	0.1W
3415	4822 100 11878	Adj. potm. 22k		
3416	4822 050 24708	4E7	1%	0.6W
3417	4822 051 20222	2k2	5%	0.1W
3421	4822 051 20473	47k	5%	0.1W
3422	4822 116 30434	Thermistor 470k		
3425	4822 051 20222	2k2	5%	0.1W
3429	4822 051 20103	10k	5%	0.1W
3430	4822 051 20103	10k	5%	0.1W

Resistor

3431	4822 051 20222	2k2	5%	0.1W
3432	4822 051 20103	10k	5%	0.1W
3433	4822 051 20222	2k2	5%	0.1W
3434	4822 051 20222	2k2	5%	0.1W
3437	4822 051 20222	2k2	5%	0.1W
3438	4822 051 20008	0E	5%	0.1W
3441	4822 051 20008	0E	5%	0.1W
3703	4822 051 20221	220E	5%	0.1W
3704	4822 100 11348	Adj. potm. 1k		
3705	4822 051 20105	1M	5%	0.1W
3706	4822 051 20563	56k	5%	0.1W
3707	4822 051 20823	82k	5%	0.1W
3709	4822 051 20333	33k	5%	0.1W
3723	4822 051 20221	220E	5%	0.1W
3724	4822 100 11348	Adj. potm. 1k		
3725	4822 051 20105	1M	5%	0.1W
3726	4822 051 20563	56k	5%	0.1W
3727	4822 051 20823	82k	5%	0.1W
3729	4822 051 20333	33k	5%	0.1W
3751	4822 051 20101	100E	5%	0.1W
3752	4822 051 20103	10k	5%	0.1W
3762	4822 051 20008	0E	5%	0.1W
3764	4822 051 20008	0E	5%	0.1W
3766	4822 051 20008	0E	5%	0.1W
3767	4822 051 20008	0E	5%	0.1W

Coil

5401	4822 157 50975	1mH
5402	4822 157 50965	15μH
5403	4822 157 50965	15μH

Diode Transistor

4822 130 42705	BC847
4822 130 61233	BC857
5322 130 61677	BC875
4822 130 34379	BZX79-B27
4822 130 30621	1N4148

I.C.

6401	4822 209 31559	ST6231+RC μP SCA 2.2
6401	4822 209 31576	ST6031 RC5 μP SCA 2.5
6402	4822 209 31617	TDA7272 Motor control
6701	4822 209 71871	TA7784P Pre-amplifier

MISCELLANEOUS

1001	4822 281 11051	Double magnet
1002	4822 361 30297	Servo motor
1003	4822 361 30294	Capstan motor
1004	4822 249 30186	Playback head
1401	4822 242 70831	Ceram. resonator 4MHz

Car CD mechanism CMX-200

Service
Service
Service

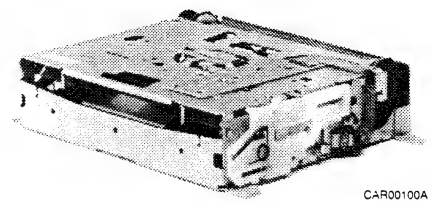

12 V ⎓

Contents **Page**

1.	Specification	1
2.	Functional description	2
3.	Service hints	2
4.	Checks	2
5.	Block diagrams IC's	3
6.	Adjustments	4
7.	Block diagram	5
8.	Layout pcb's & wiring diagram	6 (2x)
9.	Circuit diagram I	7
10.	Circuit diagram II	8
11.	Wave forms	9
12.	Lead layout semi-conductors	9
13.	Modifications	9
14.	Expl. views + list of mech. parts	10
15.	List of electrical parts	11

1. SPECIFICATION

Operating voltage	: 10.8 - 15.6V
Operating temperature	: -10 - 50°C
Frequency response	: 5 - 20,000Hz ± 3dB
Harmonic distortion	: 0.015% (1kHz)
S/N ratio	: ≥ 80dB
Channel difference	: ≤ 3dB
Channel separation	: ≥ 70dB

COMPACT disc DIGITAL AUDIO

CLASS 1
LASER PRODUCT

Published by Philips Car Systems Printed in The Netherlands ©Copyright reserved Subject to modification 4822 725 24151

PHILIPS

2. FUNCTIONAL DESCRIPTION

When the Optical pick-up block has moved completely towards the centre and the limit switch is switched on, the sled motor starts to rotate the gear in the direction of the arrow (Fig. 1).

The deck section is fixed to the chassis. Now the lock gear switch is switched on and the loading motor starts rotating to eject the CD.

3.1 SERVICE HINTS

In PLAY mode, the deck section is only connected to the chassis through the dampers to avoid it is affected by vibrations.
The lock gear is fixed in the notch of the chassis only in STOP mode (Fig. 2).
If the lock gear is not firmly fixed in the notch, the disc cannot be inserted or removed.
In that case rotate the gear near the sled motor by hand till the lock gear is fixed firmly.

- When serviceing, do not take the Optical pick-up block apart and do not adjust the APC circuit.
  In case of a defect replace the complete Optical pick-up block (including the APC pcb).
- When re-assembling, place the Sensor pcb while keeping the pin pressed to the right (Fig. 3). Fixing the Sensor pcb forcibly may cause breakage of the switch.

3.2 SERVICE TOOLS

Test CD "skew disc"	4822 701 11922	Test CD "5" & "5A"	4822 397 30096
Test CD "eccentricity"	4822 701 11923	Test CD "Audio signals 1"	4822 397 30184

4. CHECKS

Initial start-up, rafoc unit
- Insert test CD "skew-disc".
- Playback tracks 1-9 (first 20 minutes) without interruptions.

Disc drive motor and servo motor
- Insert test CD "eccentricity".
- Playback tracks 1-20 without interruptions.

Interruptions, black dots, fingerprints
- Insert test CD "5A".
- Playback tracks 9, 11-17 (prefered: 17), 18, 19 (prefered 19) without interruptions.

Specification
- Check with test CD "Audio signals disc 1".

5.1 IC1 PINS

Pin	Description	Pin	Description	Pin	Description
1	Serial data out	18	Audio mute control out	40	Clock in
2	Clock out	19	PLL control out	41	Serial data out
3	Latch out	20	Clock out	42	Reserved
4	Loading start in	21	Reset out	43	Serial data in
	8cm disc eject compl in	22	Laser control out	44	Ground
5	Disc chucking compl in	23	8cm disc gain ctl out	45-48	Reserved
6	Chucking start out	24, 25	Ground	49	Sound ctl (tm) out
7	8/12cm disc detect in	26, 28	VDD	50-52	Ground
8	Lock gear detect in	27, 39	Chip select in	53-56	Tm (test mode) setting
9	Disc sensor in	29, 30	Crystal	57	Reserved
10,11	Ground	31	Reset in	59	Subcode sync S sgnl in
12	Frame sync lock det in	32	Plunger control in		
13	SENSE in	33, 34	Loading motor ctl out	60	Signal request out
14	Focus OK in	35	Test mode control out	61, 62	Sled motor control out
15	Temp detection out	36	Error ctl (tm) out	63	Subcode Q signal in
16	Digital mute ctl out	37	Reserved	64	Clock (subcode Q) out
17	Emphasis control out	38, 58	VDD		

PCS 74 068

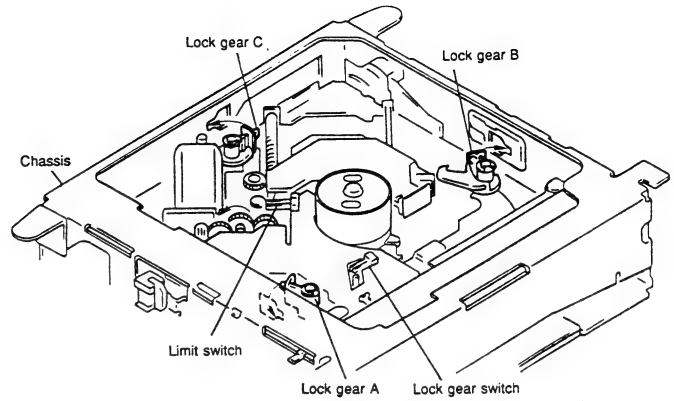

Fig. 1

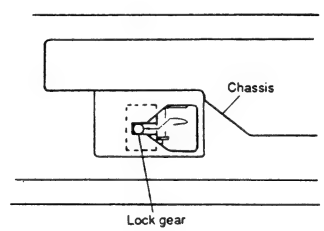

Fig. 2

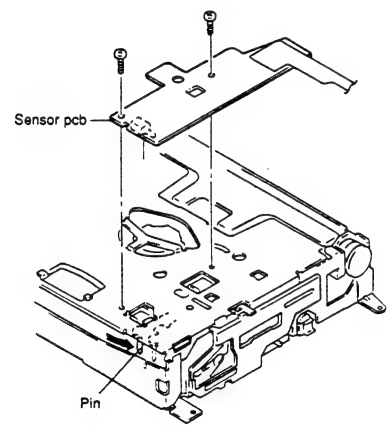

Fig. 3

PCS 74 068

5.2 IC BLOCKDIAGRAMS

IC301 PCM66P

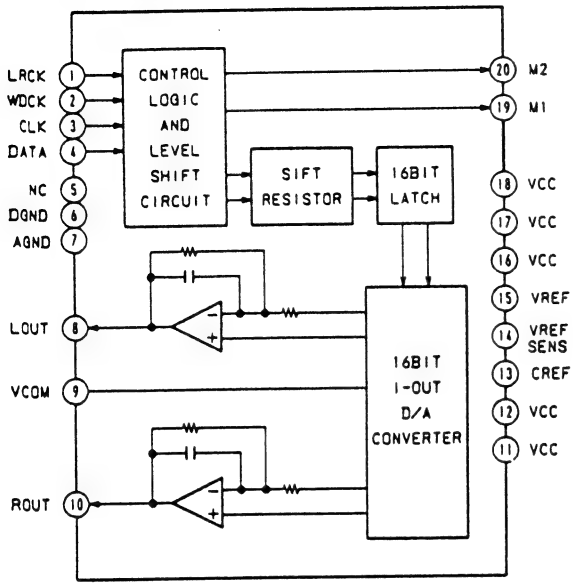

IC403 BA6208F

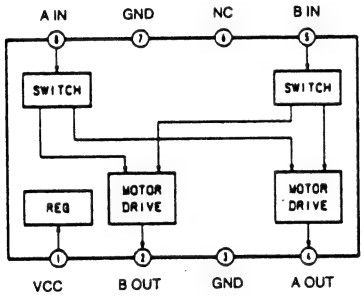

IC501 CXA1081Q

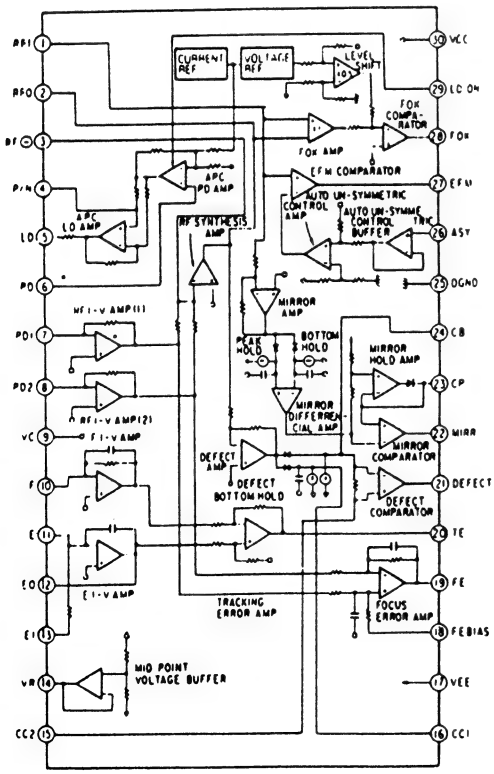

IC502 CXA1082BQ

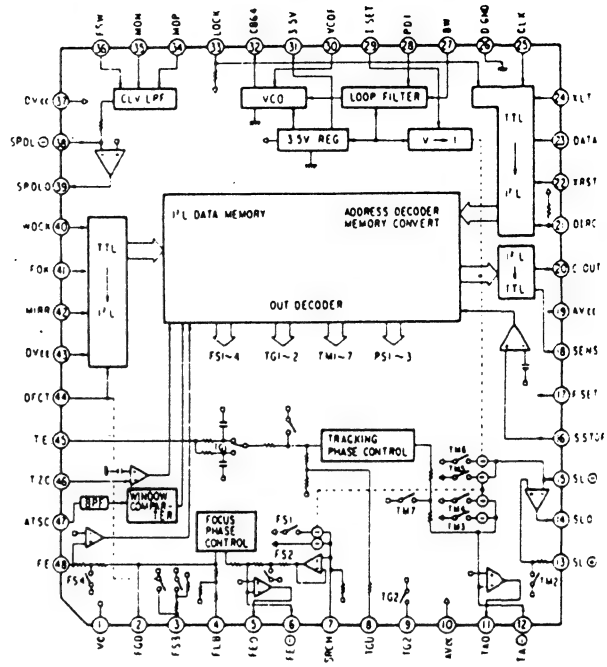

IC503 CXD1125Q

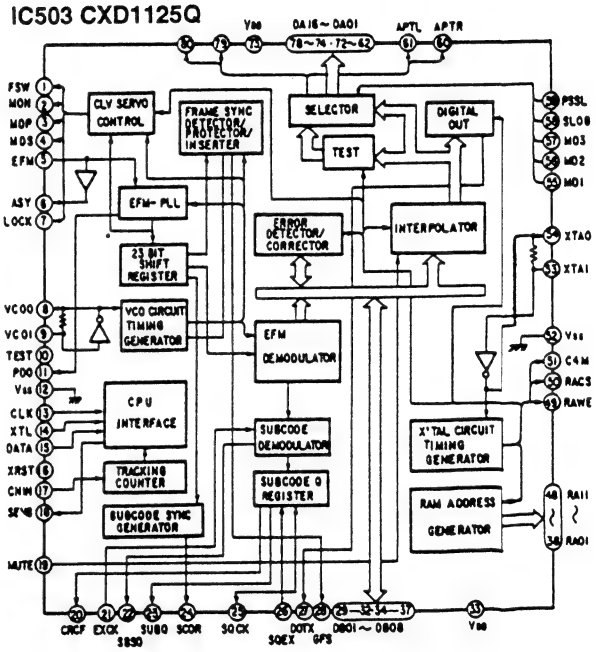

IC505CXD1316D

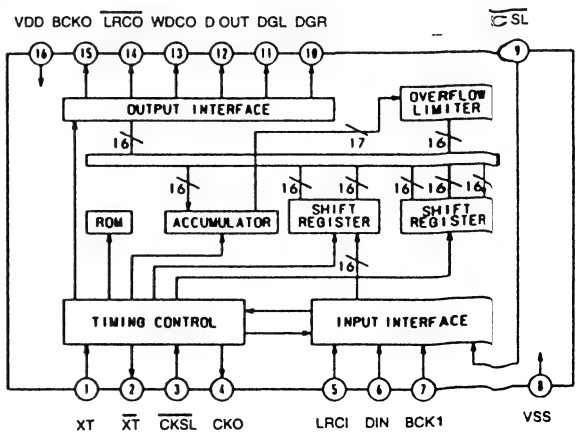

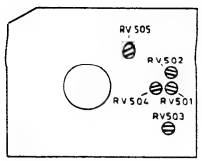

Fig. 7

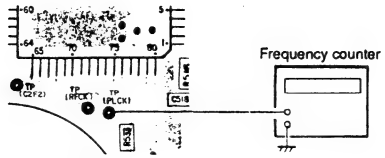

Fig. 8

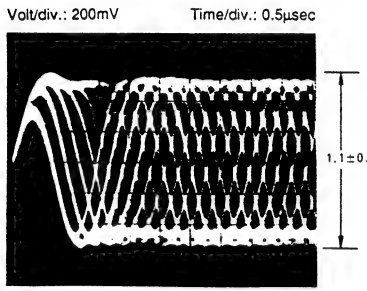

Fig. 10

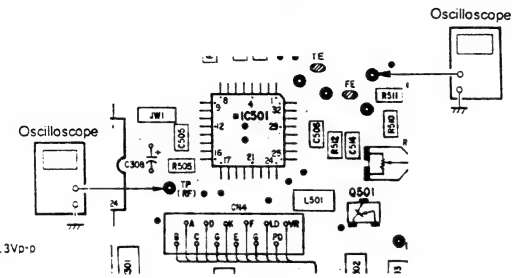

Fig. 9

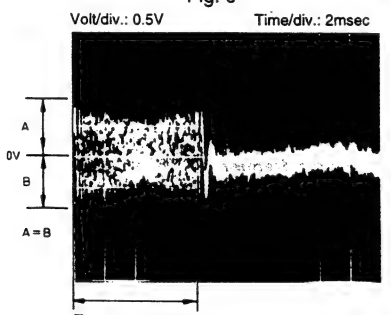

Traverse waveform (100 track jump waveform)

Fig. 11

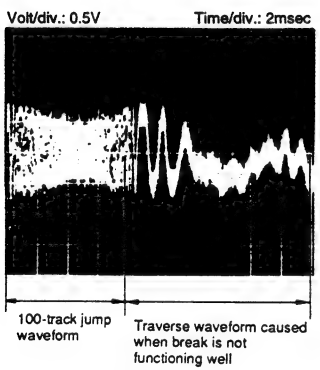

Fig. 12

Fig. 14

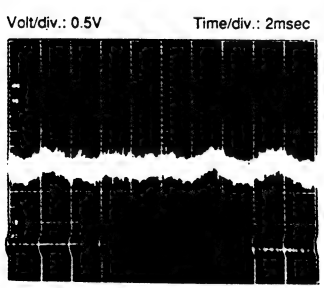

Fluctuating waveform

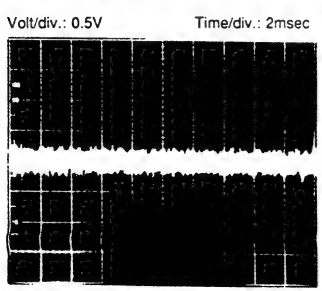

Stable waveform

Fig. 13

PCS 74 070

6.1 MECHANICAL ADJUSTMENTS

Turntable height

- Loosen the fixing screws (2x).
- Adjust the height as shown in Fig. 4.

Lock gears A and B

As adjustment of lock gears A and B is the same, only the one of lock gear B is described.

- Rotate the gear near the sled motor manually to move the Optical block towards the outside until the lock gear is disengaged from the notch of the chassis.
- Adjust the lock gear as shown in Fig. 5.

Lock gear C

- Rotate the gear near the sled motor manually to move the Optical block towards the outside until the lock gear is disengaged from the notch of the chassis.
- Adjust the lock gear as shown in Fig. 6.

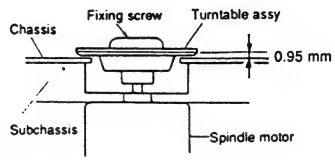

Fig. 4

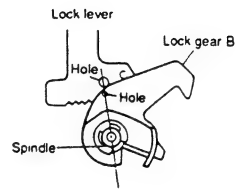

Fig. 5

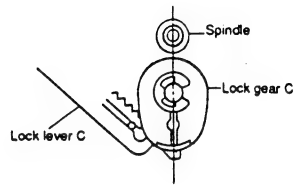

Fig. 6

6.2 ELECTRICAL ADJUSTMENTS

PLL free-run frequency

- Open solder bridge "EFM" (copper track 8-IC501).
- Connect frequency counter to test point "PLCK" (Fig. 8).
- Adjust RV505 to 4.3118 - 4.3318MHz.

Focus offset

- Connect oscilloscope to test point "RF" (Fig. 9).
- Load a disc and set mode to PLAY.
- Adjust RV502 to max. height and good shape of wave form (Fig. 10). Mark "◊" to be clearly distinguished at the centre).

Tracking offset

- Connect oscilloscope to test point "TE" (Fig. 9).
- Load a disc, set mode to PLAY and press a SEARCH button.
- Adjust RV501 to max. symmetry of traverse wave form (Fig. 11).
  Note: Traverse wave form: tracking error wave form observed when track is traversed.

Tracking gain

This adjustment is only necessary after replacing the Optical block or RV503.

In that case first adjust the focus and tracking offset (see above). The gain is too low: When music is selected by pressing a SEARCH button, the tracking jump wave form is not focused completely and the music selection is delayed (break function does not work well). See Fig. 12. The gain is too high: Noise, due to scratches and dust, is heard and the operation becomes unstable.
If this is so, proceed as follows:
Connect oscilloscope to test point "TE" (Fig. 9).
Load a disc and set mode to PLAY.
Adjust RV503 to a stable wave form (Fig. 13)

Focus gain

This adjustment is only necessary after replacing the Optical block or RV504.
The gain is too low:
Focus does not function and no music is selected. The gain is too high:
Noise, caused by scratches and dust, is heard and the operation becomes unstable.
If this is so, proceed as follows:

- Set RV504 to the standard position (Fig. 14).
- If operation noise (white noise type), caused by the double-axis device (lens section of the Optical block) is abnormally loud, set RV504 slightly counter-clockwise.

PCS 74 070

CMX 200

7. BLOCKDIAGRAM

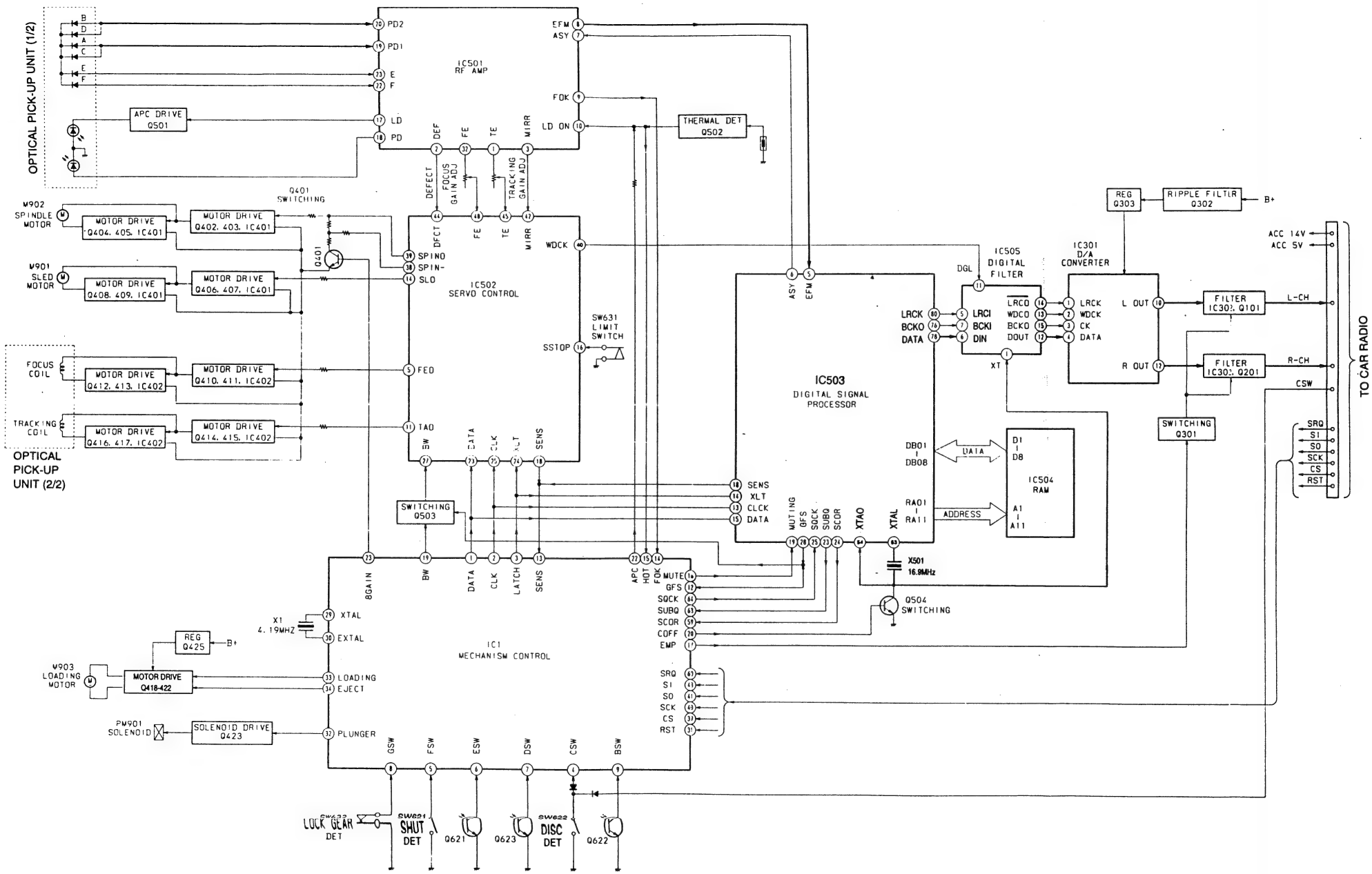

8. LAYOUT PCB'S & WIRING DIAGRAM

C1	I6	C302	J11	C431	D13	C513	G14	C575	D10	D633	D3	M901	B5	Q408	C12	Q501	I13	R007	I7	R321	I8	R421	E14	R447	E13	R513	I14	R631	B3	X1	E7
C2	E7	C303	J10	C432	D13	C514	G13	C576	C9	D901	G12	M902	C2	Q409	C12	Q502	F8	R008	E12	R322	I8	R422	E14	R451	C8	R514	E13	R901	G8	X501	E9
C3	E7	C304	H10	C441	E14	C515	F14	C577	G14	IC1	G7	M903	E5	Q410	C13	Q503	E12	R010	G12	R323	I8	R423	E14	R452	C8	R515	E13	R902	E13		
C101	I10	C305	H10	C442	E14	C516	F14	C578	I14	IC301	I11	PM901	E1	Q411	C13	Q504	E8	R101	I9	R324	I8	R424	D14	R453	C7	R516	F14	RV401	D11		
C102	I9	C306	I10	C443	E13	C517	E13	C579	G12	IC302	I8	Q101	I6	Q412	C13	Q621	H2	R102	I9	R401	E12	R425	D14	R454	C7	R517	F12	RV501	G13		
C103	I9	C307	H8	C470	C10	C518	D13	C602	G5	IC401	D12	Q201	I9	Q413	C14	Q622	I1	R103	I9	R402	D11	R426	D14	R455	D8	R518	F12	RV502	G14		
C104	I9	C308	I11	C501	J12	C519	F12	C901	E12	IC402	D14	Q301	H8	Q414	C12	Q623	I2	R104	I9	R403	D11	R431	E14	R501	J13	R519	E11	RV503	I14		
C105	I9	C309	J10	C502	J13	C520	E11	C902	G12	IC501	I12	Q302	J8	Q415	C12	R3	E8	R105	I9	R404	D11	R432	E14	R502	J13	R520	E11	RV504	G13		
C106	I7	C321	J8	C503	I13	C521	E11	D1	E8	IC502	F13	Q303	J9	Q416	B13	R4	G8	R201	I9	R405	D12	R433	E13	R503	G14	R521	D12	RV505	F11		
C201	H10	C322	I8	C504	I12	C522	F11	D301	J10	IC503	E10	Q401	E12	Q417	B12	R16	E7	R202	I9	R406	D11	R434	D13	R504	I12	R522	G11	SW621	H2		
C202	I9	C401	E12	C505	H12	C523	G11	D302	J8	IC504	C10	Q402	B11	Q418	D8	R001	E8	R203	H9	R411	E13	R435	D13	R505	F8	R523	F11	SW622	J2		
C203	H8	C402	D12	C506	G12	C524	E11	D401	C8	IC505	H11	Q403	C11	Q419	C8	R002	D8	R204	H9	R412	E12	R436	D13	R506	F8	R526	E11	SW631	B4		
C204	I9	C411	D12	C507	H12	C525	F9	D402	D8	JR601	F5	Q404	C11	Q420	C7	R003	H6	R205	I9	R413	E12	R443	E12	R507	G11	R527	D11	SW632	C3		
C205	H9	C412	D13	C508	H12	C526	F9	D403	B7	L1	I6	Q405	C11	Q421	C8	R004	H6	R301	J9	R414	D12	R444	E14	R508	H12	R530	E8	TH441	E14		
C206	H7	C421	D14	C511	G13	C573	G12	D631	B3	L501	I13	Q406	B11	Q422	C8	R005	G6	R302	J9	R415	D13	R445	F14	R509	I13	R531	E13	TH442	F14		
C301	J11	C422	D14	C512	H14	C574	F11	D632	D3	L502	C10	Q407	B12	Q425	B7	R006	G6	R303	J9	R416	D12	R446	E13	R512	I14	R532	C8	TH501	E8		

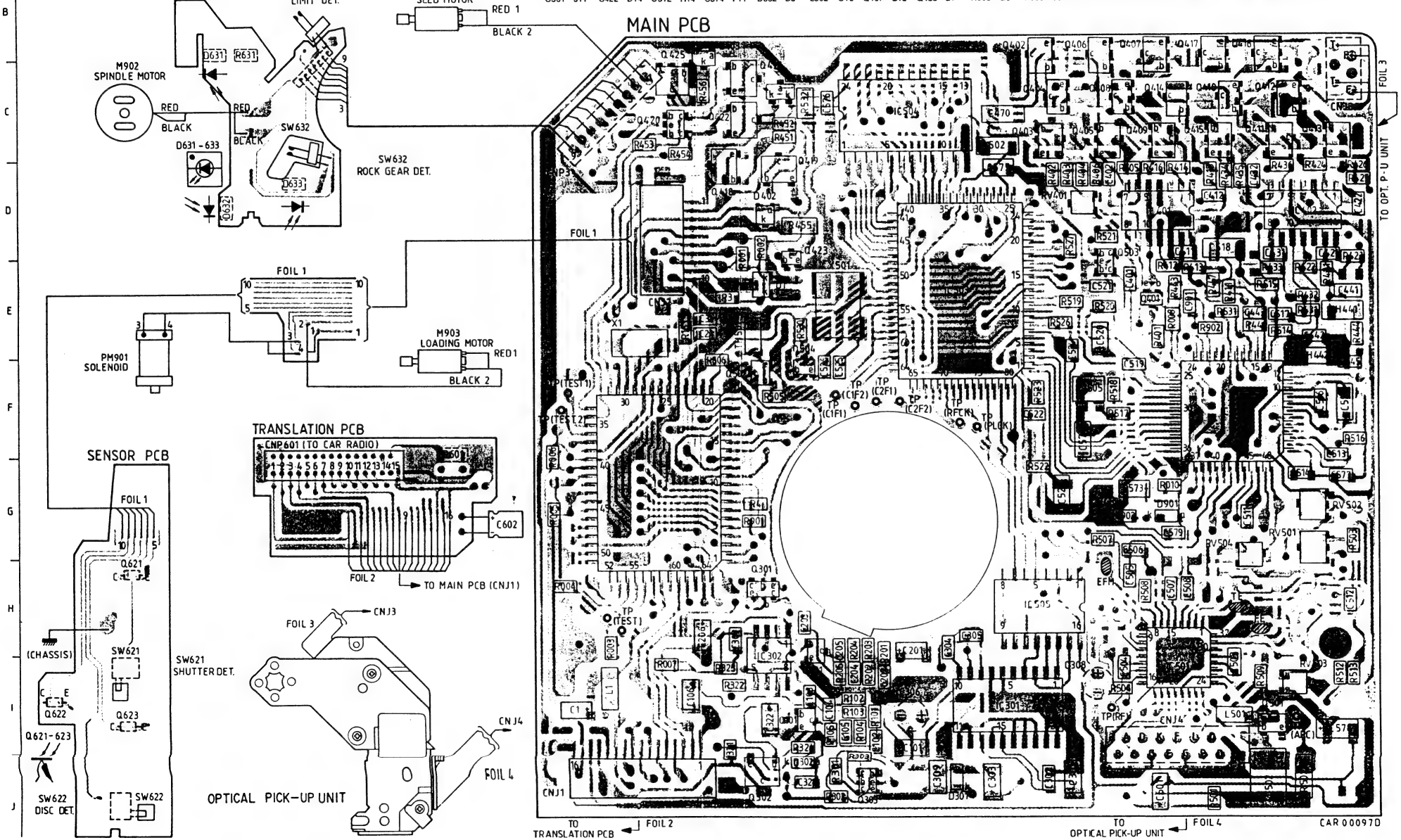

8. LAYOUT PCB'S & WIRING DIAGRAM

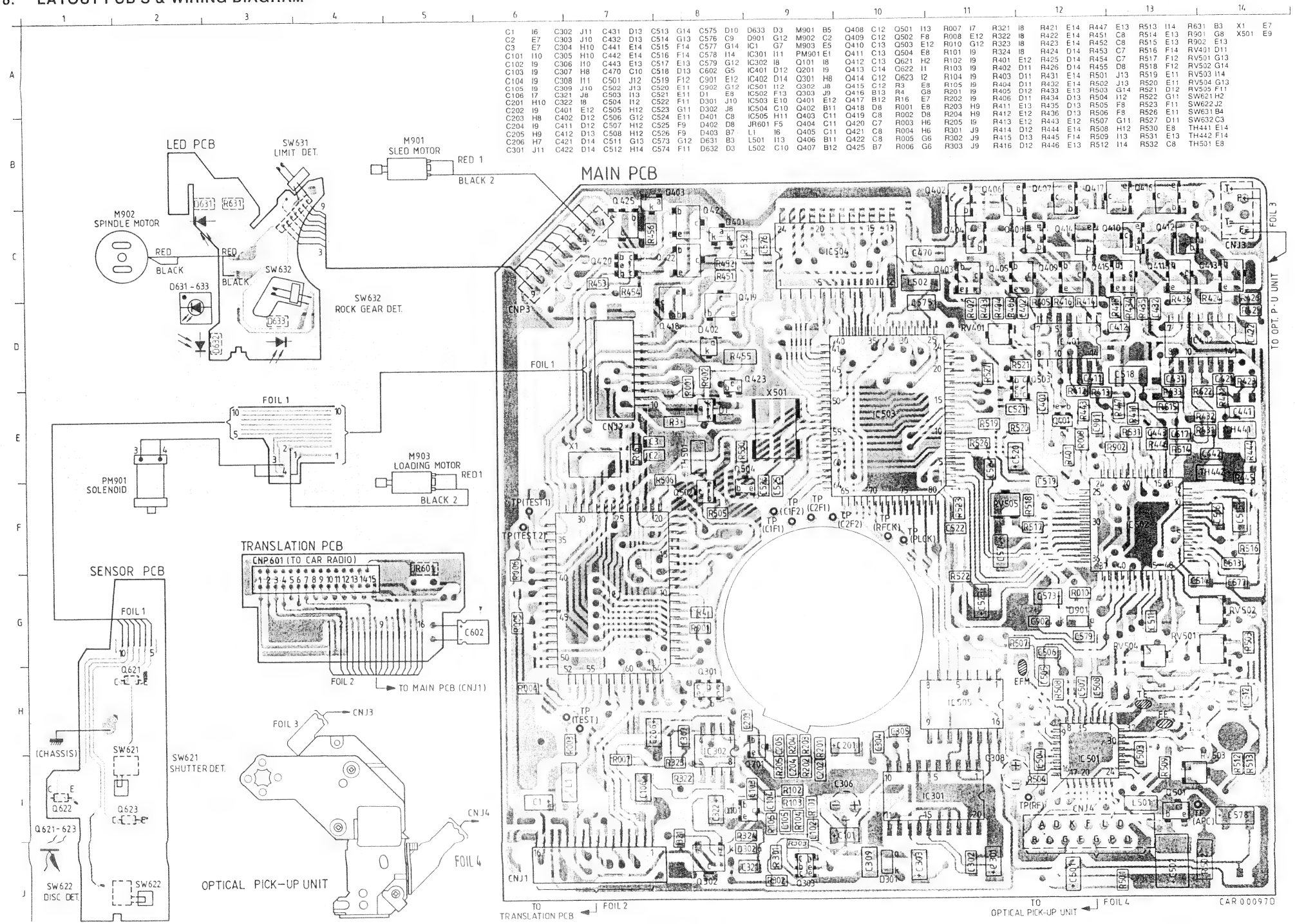

C1	I6	C302	J11	C431	D13	C513	G14	C575	D10	D633	D3	M901	B5	Q408	C12	Q501	I13	R007	I7	R321	I8	R421	E14	R447	E13	R513	I14	R631	B3	X1	E7
C2	E7	C303	J10	C432	D13	C514	G13	C576	C9	D901	G12	M902	C2	Q409	C12	Q502	F8	R008	E12	R322	I8	R422	E14	R451	C8	R514	E13	R901	G8	X501	E9
C3	E7	C304	H10	C441	E14	C515	F14	C577	G14	IC1	G7	M903	E5	Q410	C13	Q503	E12	R010	G12	R323	I8	R423	E14	R452	C8	R515	E13	R902	E13		
C101	I10	C305	H10	C442	E14	C516	F14	C578	I14	IC301	I11	PM901	E1	Q411	C13	Q504	E8	R101	I9	R324	I8	R424	D14	R453	C7	R516	F14	RV401	D11		
C102	I9	C306	I10	C443	E13	C517	E13	C579	G12	IC302	I8	Q101	I8	Q412	C13	Q621	H2	R102	I9	R401	E12	R425	D14	R454	C7	R517	F12	RV501	G13		
C103	I9	C307	H8	C470	C10	C518	D13	C602	G5	IC401	D12	Q201	I9	Q413	C14	Q622	I1	R103	I9	R402	D11	R426	D14	R455	D8	R518	F12	RV502	G14		
C104	I9	C308	I11	C501	J12	C519	F12	C901	E12	IC402	D14	Q301	H8	Q414	C12	Q623	I2	R104	I9	R403	D11	R431	E14	R501	J13	R519	E11	RV503	I14		
C105	I9	C309	J10	C502	J13	C520	E11	C902	G12	IC501	I12	Q302	J8	Q415	C12	R3	E8	R105	I9	R404	D11	R432	E14	R502	J13	R520	E11	RV504	G13		
C106	I7	C321	J8	C503	I13	C521	E11	D1	E9	IC502	F13	Q303	J9	Q416	B13	R4	G8	R201	I9	R405	D12	R433	E13	R503	G14	R521	D12	RV505	F11		
C201	H10	C322	I8	C504	I12	C522	F11	D301	J10	IC503	E10	Q401	E12	Q417	B12	R16	E7	R202	I9	R406	D11	R434	D13	R504	I12	R522	G11	SW621	H2		
C202	I9	C401	E12	C505	H12	C523	G11	D302	J8	IC504	C10	Q402	B11	Q418	D8	R001	E8	R203	H9	R411	E13	R435	D13	R505	F8	R523	F11	SW622	J2		
C203	H8	C402	D12	C506	G12	C524	E11	D401	C8	IC505	H11	Q403	C11	Q419	C8	R002	D8	R204	H9	R412	E12	R436	D13	R506	F8	R526	E11	SW631	B4		
C204	I9	C411	D12	C507	H12	C525	F9	D402	D8	JR601	F5	Q404	C11	Q420	C7	R003	H6	R205	I9	R413	E12	R443	E12	R507	G11	R527	D11	SW632	C3		
C205	H9	C412	D13	C508	H12	C526	F9	D403	B7	L1	I6	Q405	C11	Q421	C8	R004	H6	R301	J9	R414	D12	R444	E14	R508	H12	R530	E8	TH441	E14		
C206	H7	C421	D14	C511	G13	C573	G12	D631	B3	L501	I13	Q406	B11	Q422	C8	R005	G6	R302	J9	R415	D13	R445	F14	R509	I13	R531	E13	TH442	F14		
C301	J11	C422	D14	C512	H14	C574	F11	D632	D3	L502	C10	Q407	B12	Q425	B7	R006	G6	R303	J9	R416	D12	R446	E13	R512	I14	R532	C8	TH501	E8		

9. CIRCUIT DIAGRAM I

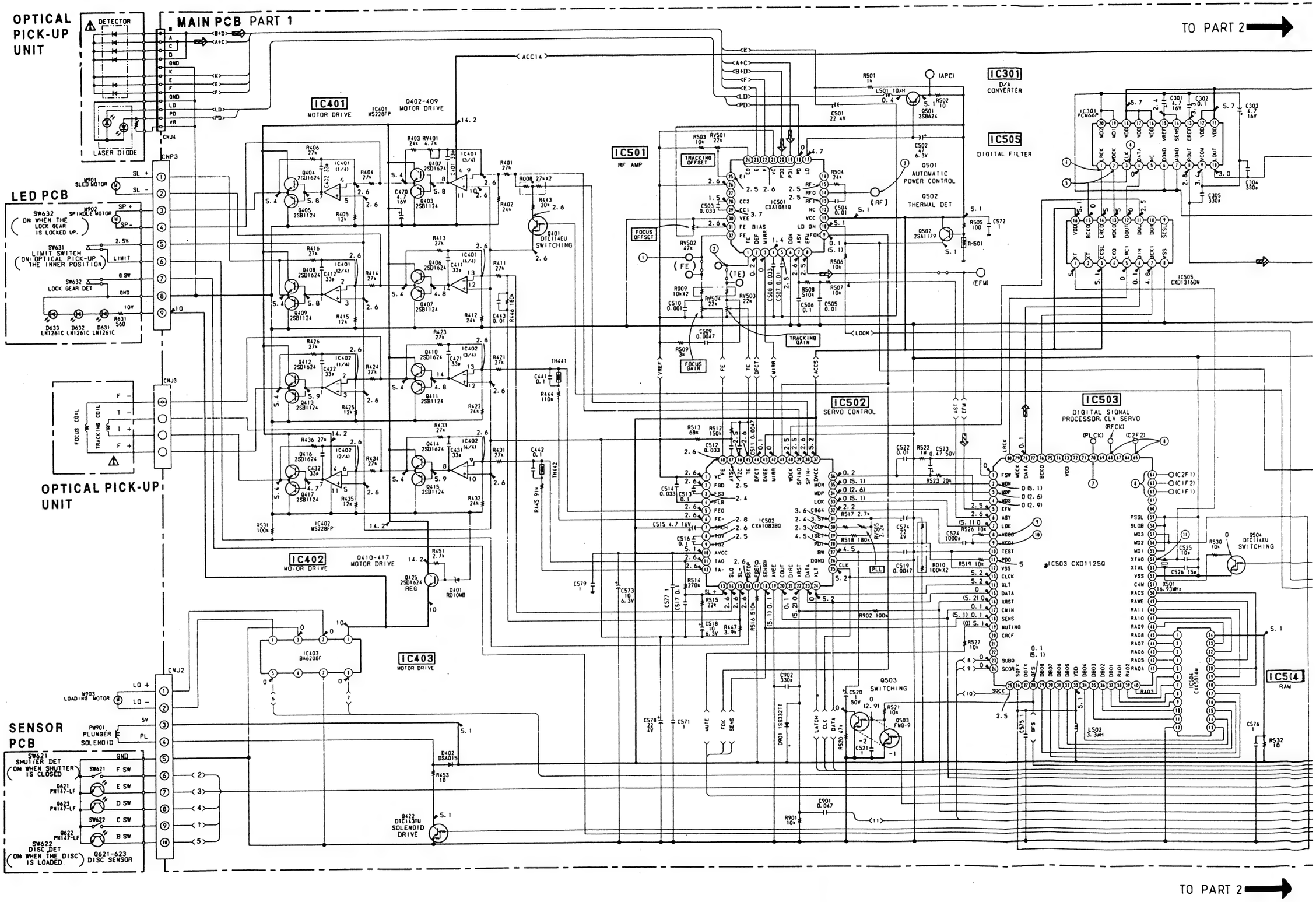

10. CIRCUIT DIAGRAM II

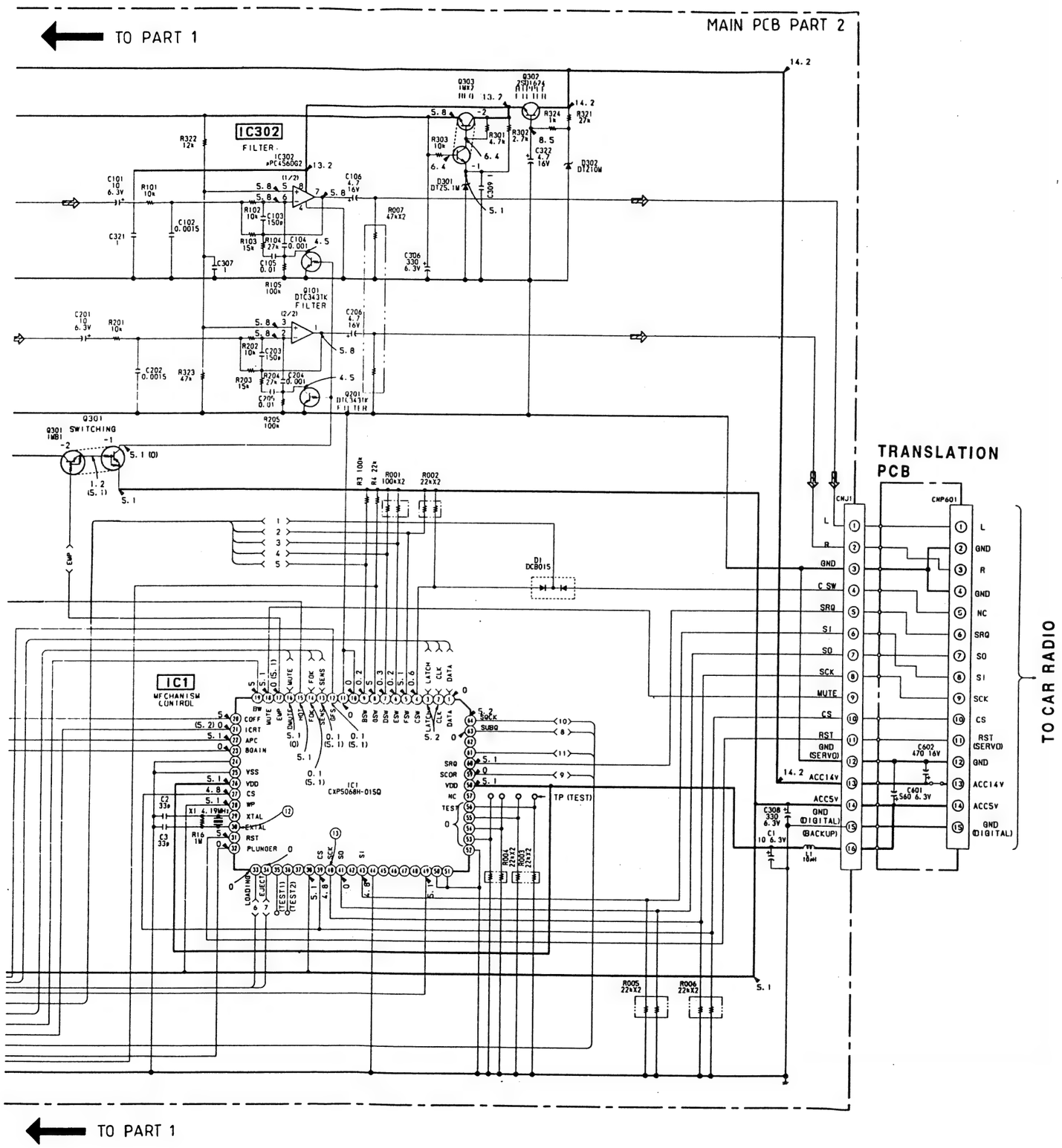

PCS 74 074

11. MEASURING CONDITIONS

- Supply voltage: 14.4V DC
- Voltages and wave forms are DC with respect to ground. No signal applied.
  ...V : STOP
  (...V) : PLAY.
- Voltages are measured with an EVM, input impedance 10MΩ.
- Circled numbers refer to wave forms, measured with an oscilloscope.
- ▭ : adjustment for repair
  Signal path ⇨ : CD
- Position of switches:

Item	Function	Position
SW621	Shutter det.	Off
SW622	Disc det.	Off
SW631	Limit	On
SW632	Lock gear	On

11. WAVE FORMS

①

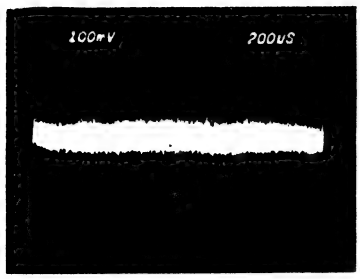

⑤

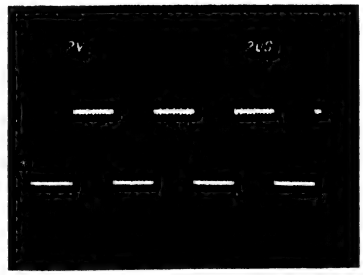

⑨

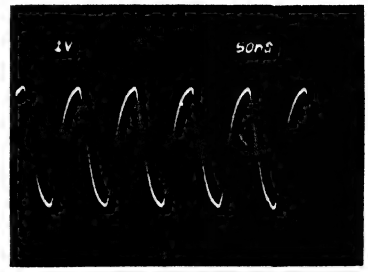

②

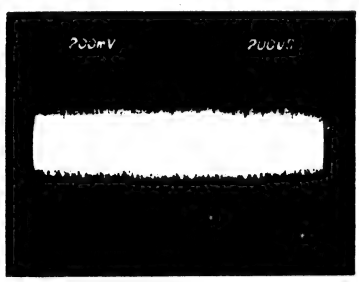

⑥

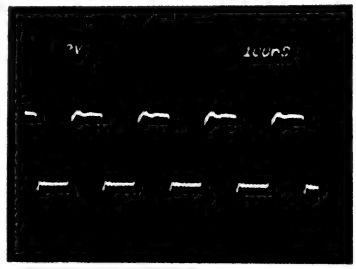

⑩

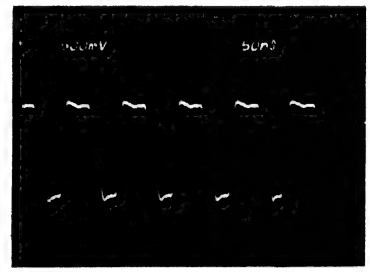

③

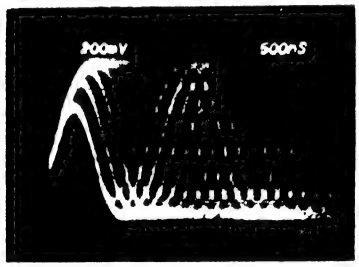

⑦

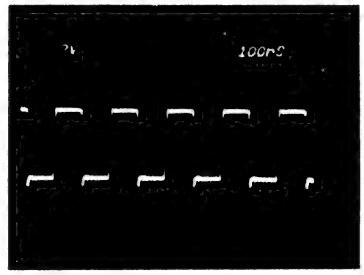

⑪

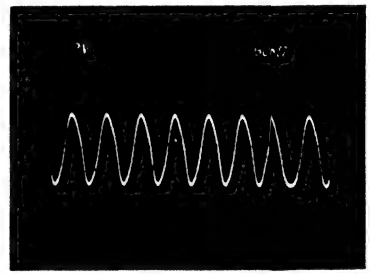

④

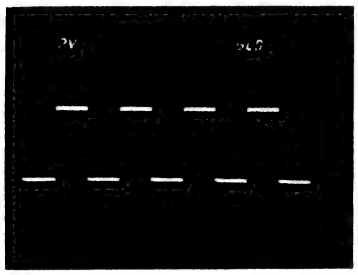

⑧

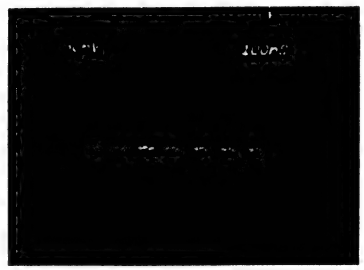

⑫

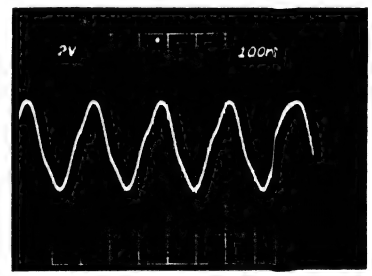

⑬

12. LEAD LAYOUT SEMI-CONDUCTORS

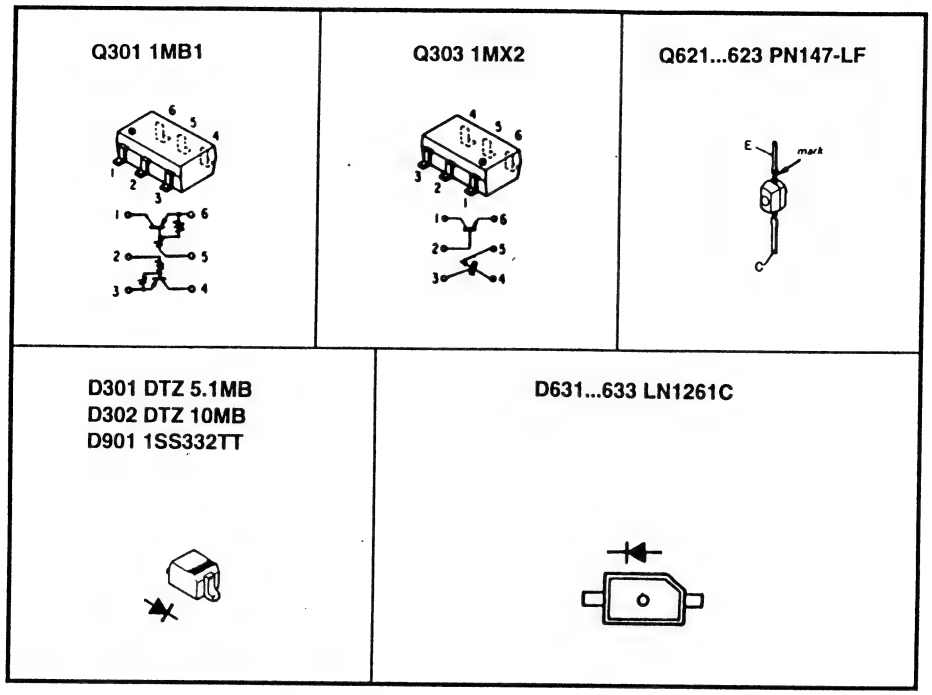

13. MODIFICATIONS IN PRODUCTION

- During production the loading motor drive circuit has been redesigned into an IC-version. Circuit diagram I (page 7) shows the changed version. The original circuit is shown below. The layout of the main pcb shows the original version. The list of electrical parts shows the original parts.
- Q424, R448, R449 have been added. Also, some components have been renumbered. Refer to modified cicuit diagram below. This modification is shown neither in the layout of the main pcb, nor in the list of electrical parts.
- C901, 902, D902, R901, 902 have been added to 22-IC502. Original circuit: 22-IC502 connected to 16-IC503/21-IC1, connection 11 from 61-IC1 to R449.

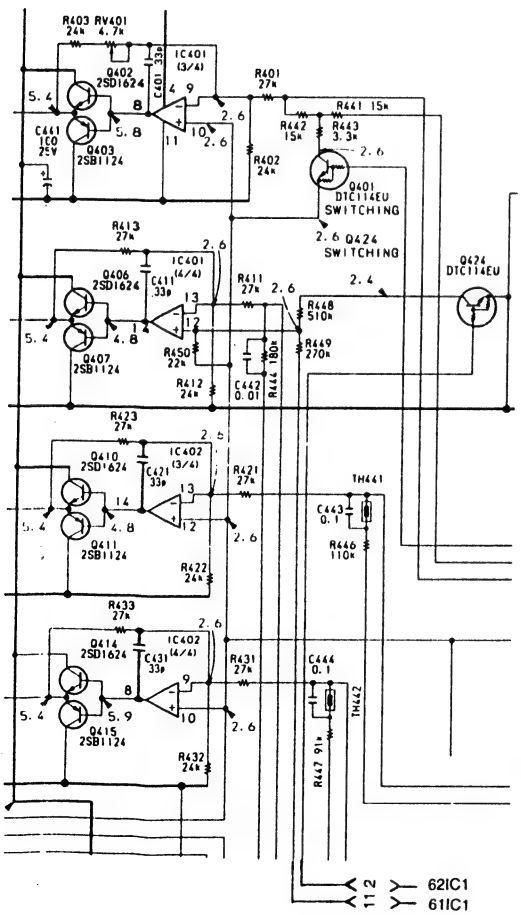

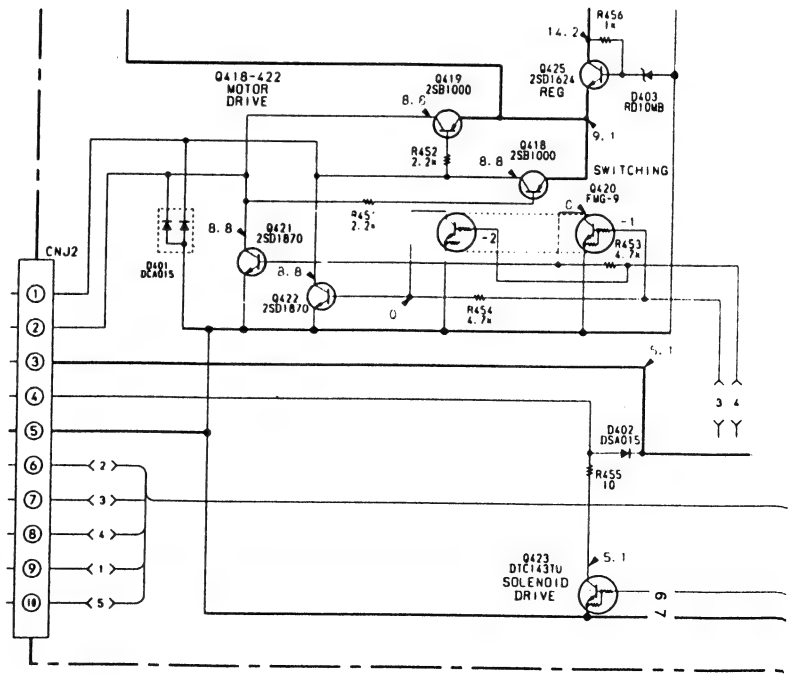

PCS 74 075

14. EXPLODED VIEWS & LIST OF MECHANICAL PARTS

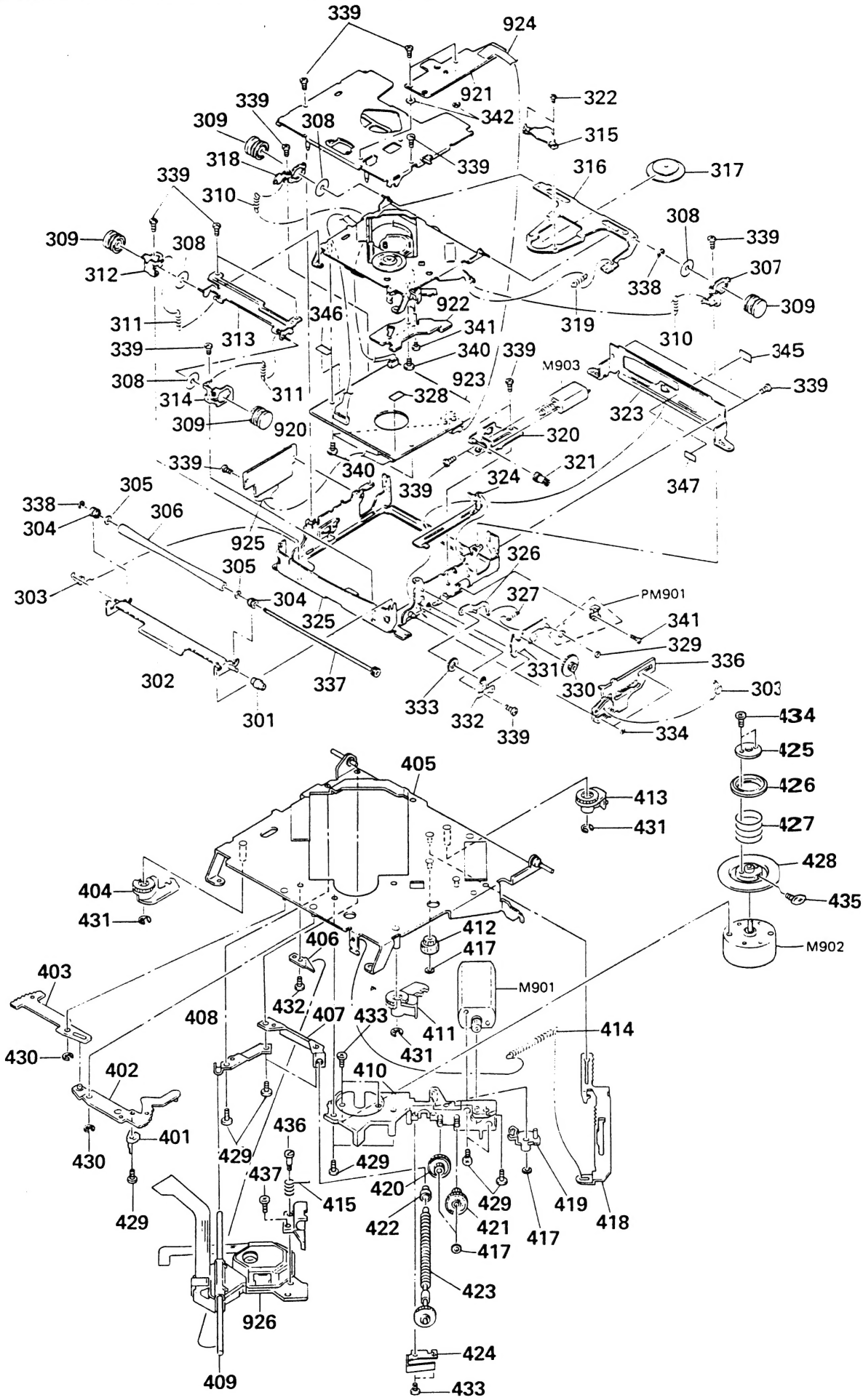

PCS 74 076

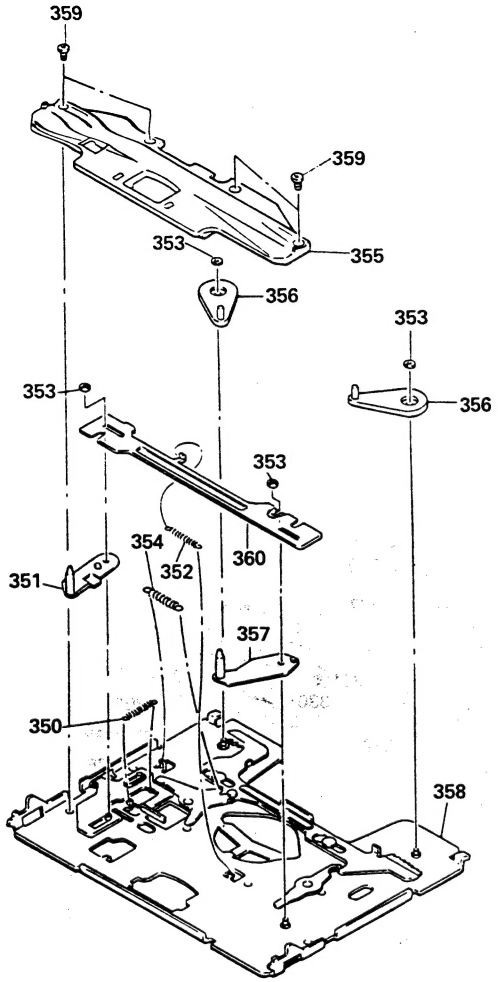

Only parts stated below are considered Service parts.

301	4822 520 40287	
303	4822 492 42575	
306	4822 528 70766	
309	4822 529 10275	
310	4822 492 33304	
311	4822 492 33303	
315	4822 404 21187	
317	4822 526 20195	
319	4822 492 33302	
321	4822 522 33154	
322	4822 502 13858	
327	4822 492 33308	
330	4822 522 33153	
333	4822 522 33151	
334	4822 532 12115	
336	4822 404 21188	
337	4822 535 93265	
338	4822 530 70599	
339	4822 502 13859	2x2.5
340	4822 502 13854	2x3
341	4822 502 13862	1.4x3
350	4822 492 33307	
352	4822 492 33306	
353	4822 532 12115	
354	4822 492 33305	
356	4822 522 33152	
401	4822 404 21186	
404	4822 522 33148	
410	4822 464 70583	
411	4822 522 33147	
412	4822 522 33144	
413	4822 522 33149	
414	4822 492 33301	
415	4822 492 42574	
416	4822 505 11108	
417	4822 532 52372	
419	4822 404 21185	
420	4822 522 33146	
421	4822 522 33145	
422	4822 532 52371	
423	4822 502 13852	
425	4822 532 12113	
426	4822 532 12114	
427	4822 492 52275	
428	4822 528 10832	
429	4822 502 13861	2x3.5
430	4822 530 70599	2.0
431	4822 530 70601	3.0
432	4822 502 13863	2x2
433	4822 502 13857	1.7x2.5
434	4822 502 13855	1.4x2.5
435	4822 502 13856	1.4x4
436	4822 502 13853	

922	4822 214 51903	LED pcb
923	4822 214 51902	Main pcb
924	4822 214 51904	Sensor foil
925	4822 214 51905	Transl. foil
926	4822 691 10352	Opt.p-u unit
	4822 691 30254	CMX-200 complete

PCS 74 077

PCS 74 076

15. List of electrical parts

C1	4822 124 23941	10µF 20% 6.3V
C2	4822 126 11892	33pF 5% 50V
C3	4822 126 11892	33pF 5% 50V
C101	4822 124 23941	10µF 20% 6.3V
C102	4822 126 11896	1.5nF 10% 50V
C103	4822 126 11893	150pF 5% 50V
C104	4822 126 11895	1nF 10%50V
C105	4822 126 11898	10nF 10% 25V
C106	4822 124 23942	4.7µF 20% 16V
C201	4822 124 23941	10µF 20% 6.3V
C202	4822 126 11896	1.5nF 10% 50V
C203	4822 126 11893	150pF 5% 50V
C204	4822 126 11895	1nF 10% 50V
C205	4822 126 11898	10nF 10% 25V
C206	4822 124 23942	4.7µF 20% 16V
C301	4822 124 11247	4.7µF 10% 16V
C302	4822 126 11902	100nF 10% 25V
C303	4822 124 11247	4.7µF 10% 16V
C304	4822 126 11894	330pF 10% 50V
C305	4822 126 11894	330pF 10% 50V
C306	4822 124 23945	330µF 20% 6.3V
C307	4822 126 11903	1µF % 16V
C308	4822 124 23945	330µF 20% 6.3V
C309	4822 126 11903	1µF % 16V
C321	4822 126 11903	1µF % 16V
C322	4822 124 23942	4.7µF 20% 16V
C401	4822 126 11892	33pF 5% 50V
C402	4822 126 11892	33pF 5% 50V
C411	4822 126 11892	33pF 5% 50V
C412	4822 126 11892	33pF 5% 50V
C421	4822 126 11892	33pF 5% 50V
C422	4822 126 11892	33pF 5% 50V
C431	4822 126 11892	33pF 5% 50V
C432	4822 126 11892	33pF 5% 50V
C441	4822 126 11902	100nF 10% 25V
C442	4822 126 11902	100nF 10% 25V
C443	4822 126 11898	10nF 10% 25V
C470	4822 124 23942	4.7µF 20% 16V
C501	4822 124 23939	22µF 20% 4V
C502	4822 124 11246	47µF 20% 6.3V
C503	4822 126 11901	33nF 10% 25V
C504	4822 126 11899	2.7nF 10% 50V
C505	4822 126 11898	10nF 10% 25V
C506	4822 126 11902	100nF 10% 25V
C507	4822 126 11898	10nF 10% 25V
C508	4822 126 11901	33nF 10% 25V
C509	4822 126 11895	1nF 10% 50V
C510	4822 126 11895	1nF 10% 50V
C511	4822 126 11897	4.7nF 10% 50V
C512	4822 126 11901	33nF 10% 25V
C513	4822 126 11902	100nF 10% 25V
C514	4822 126 11901	33nF 10% 25V
C515	4822 124 11247	4.7µF 10% 16V
C516	4822 126 11902	100nF 10% 25V
C517	4822 126 11902	100nF 10% 25V
C518	4822 124 23941	10µF 20% 6.3V
C519	4822 126 11897	4.7nF 10% 50V
C520	4822 124 23944	1µF 20% 50V
C521	4822 126 11903	1µF % 16V
C522	4822 126 11898	10nF 10% 25V
C523	4822 124 23943	0.47µF 20% 50V
C524	4822 126 11895	1nF 10% 50V
C525	4822 126 11891	4pF 25% 50V
C526	4822 126 11891	4pF 25% 50V
C527	4822 126 11892	33pF 5% 50V
C550	4822 126 11903	1µF % 16V
C571	4822 126 11903	1µF % 16V
C572	4822 126 11903	1µF % 16V
C573	4822 124 23941	10µF 20% 6.3V
C574	4822 124 23939	22µF 20% 4V
C575	4822 126 11903	1µF % 16V
C576	4822 126 11903	1µF % 16V
C577	4822 126 11903	1µF % 16V
C578	4822 124 23939	22µF 20% 4V
C579	4822 126 11903	1µF % 16V
C580	4822 126 11895	1nF 10% 50V

JR601	4822 116 83416	Jumper 0E
JR902	4822 116 83451	Jumper 0E
R3	4822 116 83432	100k 5% 1/16W
R4	4822 116 83429	22k 5% 1/16W
R16	4822 116 83435	1M 5% 1/16W
R001	4822 111 92054	100k NETWORK
R002	4822 111 92051	22k NETWORK
R003	4822 111 92051	22k NETWORK
R004	4822 111 92051	22k NETWORK
R005	4822 111 92051	22k NETWORK
R006	4822 111 92051	22k NETWORK
R007	4822 111 92053	47k NETWORK
R008	4822 111 92052	27k NETWORK
R009	4822 111 92049	10k NETWORK
R010	4822 111 92054	100k NETWORK
R101	4822 116 83439	10k 1% 1/16W
R102	4822 116 83439	10k 1% 1/16W
R103	4822 116 83442	15k 1% 1/16W
R104	4822 116 83446	27k 1% 1/16W
R105	4822 116 83432	100k 5% 1/16W
R201	4822 116 83419	10k 1% 1/16W
R202	4822 116 83419	10k 1% 1/16W
R203	4822 116 83442	15k 1% 1/16W
R204	4822 116 83446	27k 1% 1/16W
R205	4822 116 83432	100k 5% 1/16W
R301	4822 116 83426	4.7k 5% 1/16W
R302	4822 116 83424	2.7k 5% 1/16W
R303	4822 116 83439	10k 1% 1/16W
R321	4822 116 83446	27k 1% 1/16W
R322	4822 116 83441	12k 1% 1/16W
R323	4822 116 83431	47k 5% 1/16W
R324	4822 116 83422	1k 5% 1/16W
R401	4822 116 83446	27k 1% 1/16W

R402	4822 116 83443	24k 1% 1/16W
R403	4822 116 83443	24k 1% 1/16W
R404	4822 116 83446	27k 1% 1/16W
R405	4822 116 83441	12k 1% 1/16W
R406	4822 116 83446	27k 1% 1/16W
R411	4822 116 83446	27k 1% 1/16W
R412	4822 116 83443	24k 1% 1/16W
R413	4822 116 83446	27k 1% 1/16W
R414	4822 116 83446	27k 1% 1/16W
R415	4822 116 83441	12k 1% 1/16W
R416	4822 116 83446	27k 1% 1/16W
R421	4822 116 83446	27k 1% 1/16W
R422	4822 116 83443	24k 1% 1/16W
R423	4822 116 83446	27k 1% 1/16W
R424	4822 116 83446	27k 1% 1/16W
R425	4822 116 83441	12k 1% 1/16W
R426	4822 116 83446	27k 1% 1/16W
R431	4822 116 83446	27k 1% 1/16W
R432	4822 116 83443	24k 1% 1/16W
R433	4822 116 83446	27k 1% 1/16W
R434	4822 116 83446	27k 1% 1/16W
R435	4822 116 83441	12k 1% 1/16W
R436	4822 116 83446	27k 1% 1/16W
R443	4822 116 83438	20k 5% 1/16W
R444	4822 116 83445	110k 5% 1/16W
R445	4822 116 83444	91k 5% 1/16W
R446	4822 116 83433	180k 5% 1/16W
R447	4822 116 83425	3.9k 5% 1/16W
R451	4822 116 83423	2.2k 5% 1/16W
R452	4822 116 83423	2.2k 5% 1/16W
R453	4822 116 83426	4.7k 5% 1/16W
R454	4822 116 83426	4.7k 5% 1/16W
R455	4822 116 83418	10E 5% 1/8W
R456	4822 116 83422	1k 5% 1/16W
R502	4822 116 83418	10E 5% 1/8W
R503	4822 116 83439	10k 1% 1/16W
R505	4822 116 83421	100E 5% 1/16W
R506	4822 116 83439	10k 1% 1/16W
R507	4822 116 83439	10k 1% 1/16W
R508	4822 116 83437	510k 5% 1/16W
R509	4822 116 83436	3k 5% 1/16W
R510	4822 116 83427	5.6k 5% 1/16W
R511	4822 116 83427	5.6K 5% 1/16W
R512	4822 116 83434	220k 5% 1/16W
R513	4822 116 83428	18k 5% 1/16W
R514	4822 116 83448	270k 5% 1/16W
R515	4822 116 83429	22k 5% 1/16W
R516	4822 116 83437	510k 5% 1/16W
R517	4822 116 83424	2.7k 5% 1/16W
R518	4822 116 83433	180k 5% 1/16W
R519	4822 116 83439	10k 1% 1/16W
R520	4822 116 83431	47k 5% 1/16W
R521	4822 116 83439	10k 1% 1/16W
R522	4822 116 83435	1M 5% 1/16W
R523	4822 116 83438	20k 5% 1/16W

R526	4822 116 83439	10k 1% 1/16W
R527	4822 116 83439	10k 1% 1/16W
R530	4822 116 83439	10k 1% 1/16W
R531	4822 116 83432	100k 5% 1/16W
R532	4822 116 83418	10E 5% 1/8W
R550	4822 116 83435	1M 5% 1/16W
R631	4822 116 83415	560E 5% 1/8W
R997	4822 116 83447	27k 5% 1/16W
R998	4822 116 83452	30k 5% 1/16W
R999	4822 116 83449	330k 5% 1/16W
RV401	4822 100 30168	4.7k Adj.potm.
RV501	4822 100 30165	47k Adj.potm.
RV502	4822 100 30166	47k Adj.potm.
RV503	4822 100 30169	2k Adj.potm.
RV504	4822 100 30169	22k Adj.potm.
RV505	4822 100 30167	2.2k Adj.potm.
TH441	4822 111 92055	Thermistor
TH442	4822 111 92055	Thermistor
TH501	4822 111 92055	Thermistor

L1	4822 157 63598	10µH
L501	4822 157 63598	10µH
L502	4822 157 63597	3.3µH

D1	4822 130 82816	DCB015
D301	4822 130 82817	DTZ5.1B
D302	4822 130 82818	DTZ10B
D401	4822 130 82815	DCA015
D402	4822 130 82814	DSA015
D403	4822 130 82813	RD10M
D631	4822 130 82811	LED LN1261C
D632	4822 130 82811	LED LN1261C
D633	4822 130 82811	LED LN1261C

Q101	4822 130 62893	DTC343TK
Q201	4822 130 62893	DTC343TK
Q301	4822 130 62895	IMB1
Q302	4822 130 62888	2SD1950
Q303	4822 130 62896	IMX2
Q401	4822 130 62892	DTC114EU
Q402	4822 130 62884	2SD1624-T
Q403	4822 130 62885	2SB1124-T
Q404	4822 130 62884	2SD1624-T
Q405	4822 130 62885	2SB1124-T
Q406	4822 130 62884	2SD1624-T
Q407	4822 130 62885	2SB1124-T
Q408	4822 130 62884	2SD1624-T
Q409	4822 130 62885	2SB1124-T
Q410	4822 130 62884	2SD1624-T
Q411	4822 130 62885	2SB1124-T
Q412	4822 130 62884	2SD1624-T
Q413	4822 130 62885	2SB1124-T
Q414	4822 130 62884	2SD1624-T

PCS 74 077

Q415	4822 130 62885	2SB1124-T
Q416	4822 130 62884	2SD1624-T
Q417	4822 130 62885	2SB1124-T
Q418	4822 130 62889	2SB1000
Q419	4822 130 62889	2SB1000
Q420	4822 130 62894	FMG-9
Q421	4822 130 63617	2SD1870
Q422	4822 130 63617	2SD1870
Q423	4822 130 61908	DTC143TU
Q425	4822 130 62884	2SD1624-T
Q501	4822 130 62887	2SB624
Q502	4822 130 62891	2SA1179
Q503	4822 130 62894	FMG-9
Q504	4822 130 62892	DTC114EU
Q505	4822 130 61908	DTC143TU
Q621	4822 130 62882	PN147-FL
Q622	4822 130 62882	PN147-FL
Q623	4822 130 62882	PN147-FL

IC1	4822 209 30566	CPX506BH-035Q µC
IC301	4822 209 30029	PCM66P D/A converter
IC302	4822 209 30568	NJM4560M Dig. filter
IC401	4822 209 30567	M5228FP Motor drive
IC402	4822 209 30567	M5228FP Fo/Tr servo
IC501	4822 209 61379	CXA1081Q RF Amp.
IC502	4822 209 61381	CXA1082BQ Servo ctl
IC503	4822 209 30565	CXD1125Q Signal µP
IC505	4822 209 32926	SM5807ES Dig. filter

Miscellaneous

CNJ1	4822 267 51124	16p brown
CNJ2	4822 267 51123	10p brown
CNJ3	4822 267 41019	5p white
CNJ4	4822 267 51125	13p white
CNP3	4822 267 51122	9p white
CNP601	4822 265 41156	15p
M901	4822 361 30375	SLED motor
M902	4822 361 30376	Turntable motor
M903	4822 361 30374	Loading motor
PM901	4822 281 50166	Plunger motor
SW621	4822 276 13168	Shutter detector
SW622	4822 276 13168	Disc detector
SW631	4822 271 30762	Limit detector
SW632	4822 271 30762	Rock gear detector
X1	4822 242 81008	Ceram resonator 4.19MHz
X501	4822 242 81004	Crystal 16.93MHz

PCS 74 078

22DC982/62E - 22DC962/62E

Service
Service
Service

Car Systems Service

Service Information

Corrections to the Service Manual 4822 725 24323

Pages 21 to 23 Electrical Partslist

2750	4822 122 32916	22nF 10% X7R 63V
2764	4822 122 32916	22nF 10% X7R 63V
3750	4822 051 20104	100K 5% 0,1W
3756	4822 051 20562	5K6 5% 0,1W
3757	4822 051 20393	39K 5% 0,1W
3758	4822 051 20393	39K 5% 0,1W
3762	4822 116 52186	22Ω 5% 0,5W
7750	4822 209 31373	IC L4949

Page 12-12a Radio PCB Part 2

In the upper side of the schematic diagram, do not take in acount the part "radio PCB part 3" (also the corresponding parts in the PCB layout, stated with a '*'), not used in /62E versions.
These parts are only used in 982/62B and 962/62B, service manual 4822 725 24322.

PCS 71 562
1993-07-13
4822 725 24333

PHILIPS